Cambridge O Level

Cambridge International Examinations
Cambridge Ordinary Level

CANDIDATE NAME	

CENTRE NUMBER						CANDIDATE NUMBER				

* 7 5 3 3 4 2 4 5 0 6 *

MATHEMATICS (SYLLABUS D) **4024/21**

Paper 2 **October/November 2017**

2 hours 30 minutes

Candidates answer on the Question Paper.

Additional Materials: Geometrical instruments
Electronic calculator

READ THESE INSTRUCTIONS FIRST

Write your Centre number, candidate number and name on all the work you hand in.
Write in dark blue or black pen.
You may use an HB pencil for any diagrams or graphs.
Do not use staples, paper clips, glue or correction fluid.
DO **NOT** WRITE IN ANY BARCODES.

Section A
Answer **all** questions.

Section B
Answer any **four** questions.

If working is needed for any question it must be shown in the space below that question.
Omission of essential working will result in loss of marks.
You are expected to use an electronic calculator to evaluate explicit numerical expressions.
If the degree of accuracy is not specified in the question, and if the answer is not exact, give the answer to three significant figures. Give answers in degrees to one decimal place.
For π, use either your calculator value or 3.142, unless the question requires the answer in terms of π.

The number of marks is given in brackets [ ] at the end of each question or part question.
The total of the marks for this paper is 100.

This document consists of **19** printed pages and **1** blank page.

DC (CW/AR) 136659/1
© UCLES 2017

CAMBRIDGE International Examinations

Section A [52 marks]

Answer **all** questions in this section.

1 **(a)** **(i)** Jasmine earns \$12.50 for each hour she works.
She works for 38 hours each week.
She is given a pay increase of 6%.

Calculate the total amount Jasmine earns each week after the pay increase.

Answer \$ ..... [3]

(ii) Abdul earns \$525 each week.
He moves to a new job where he earns \$462 each week.

Calculate the percentage reduction in his earnings in his new job.

Answer ..... % [2]

(iii) Maria is given a pay increase of 3%.
After the pay increase, she earns \$2472 each month.

Calculate her monthly pay before the pay increase.

Answer \$ ..... [2]

© UCLES 2017

(b) The exchange rate between dollars ($) and pounds (£) is $1 = £0.65 .
The exchange rate between euros (€) and pounds is €1 = £0.74 .

Dan changes €520 into pounds.
He spends £260 and then changes the rest into dollars.

Work out how many dollars he receives.

Answer $ ..... [3]

2 Sunil recorded the lengths, in minutes, of the 150 phone calls he made one month.
His results are summarised in the table.

Length of call (t minutes)	$0 < t \leqslant 5$	$5 < t \leqslant 10$	$10 < t \leqslant 20$	$20 < t \leqslant 30$	$30 < t \leqslant 50$
Frequency	35	42	30	28	15

(a) Calculate an estimate of the mean length of a call.

Answer ..... minutes [3]

(b) On the grid below, draw a histogram to represent this data.

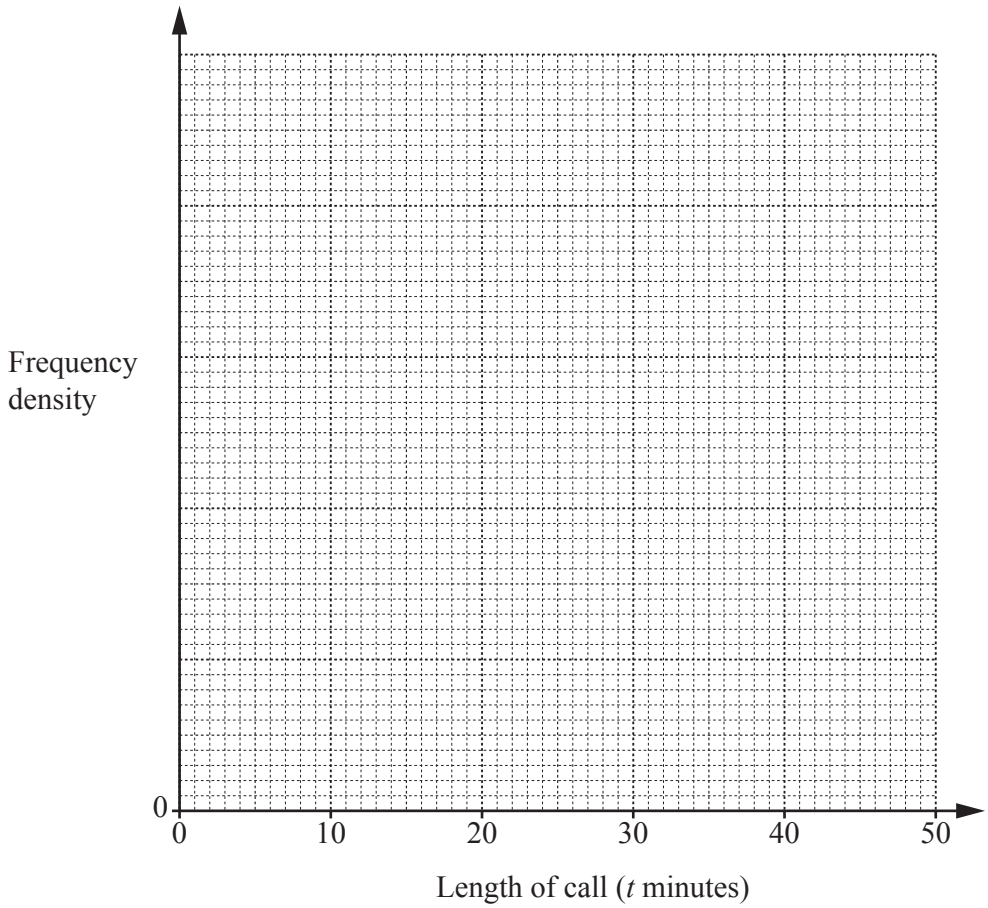

[3]

(c) Find an estimate for the percentage of Sunil's calls that were longer than 25 minutes.

Answer ..... % [2]

3

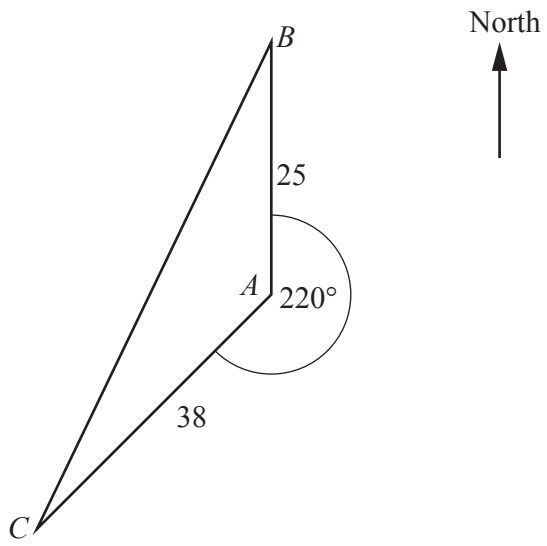

The diagram shows the positions of three towns, A, B and C.
B is due north of A and the bearing of C from A is 220°.
$AB = 25$ km and $AC = 38$ km.

(a) Find the bearing of A from C.

Answer ..... [1]

(b) Show that $BC = 59.4$ km correct to 3 significant figures.

[3]

(c) Calculate the bearing of C from B.

Answer ..... [4]

4 Adam has a bag containing 9 balls, numbered from 1 to 9.

(a) Adam takes a ball at random from the bag and replaces it.

Find the probability that the ball has an odd number.

Answer ..... [1]

(b) Adam takes a ball from the 9 balls in the bag, notes the number and replaces it.
He then takes a second ball from the bag, notes the number and replaces it.

(i) Work out the probability that both numbers are odd.

Answer ..... [1]

(ii) Work out the probability that one number is odd and the other is even.

Answer ..... [2]

(c) Adam now takes two balls from the 9 balls in the bag, **without replacement**.

Work out the probability that the two numbers are either both odd or both even.

Answer ..... [3]

© UCLES 2017

5 **(a)** Solve $\dfrac{y}{2y+3} = \dfrac{2}{y+5}$.

Answer $y =$ ..... or ..... [3]

(b) Make t the subject of the formula $p = \dfrac{4t+1}{2-t}$.

Answer ..... [3]

(c) Simplify fully $\dfrac{3x^2 - 14x + 8}{x^2 - 16}$.

Answer ..... [3]

6 **(a)**

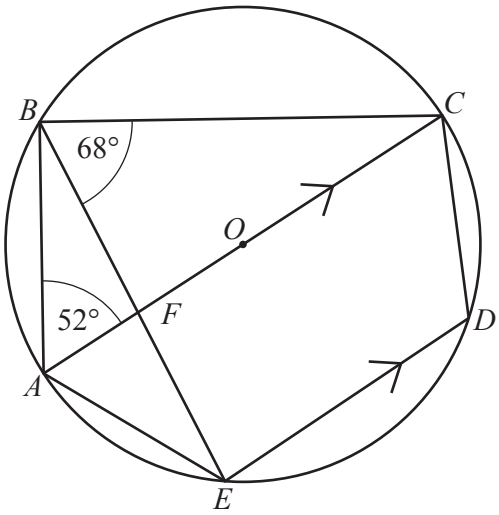

A, B, C, D and E are points on the circumference of the circle, centre O.
AC is a diameter and AC is parallel to ED.
AC and BE intersect at F.
$B\hat{A}C = 52°$ and $C\hat{B}E = 68°$.

(i) Find $A\hat{C}B$.

Answer $A\hat{C}B =$ ..... [1]

(ii) Find $A\hat{E}F$.
Give a reason for your answer.

Answer $A\hat{E}F =$ ..... because ..... [1]

(iii) Find $C\hat{D}E$.

Answer $C\hat{D}E =$ ..... [1]

(iv) Find $B\hat{C}D$.

Answer $B\hat{C}D =$ ..... [2]

© UCLES 2017

(b)

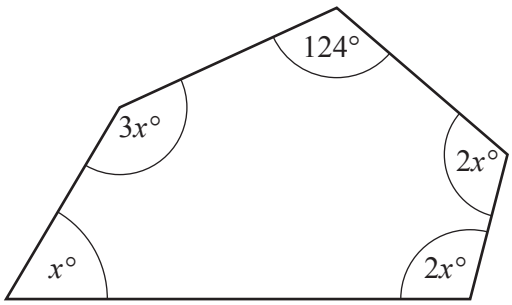

Work out the size of the largest angle in the pentagon.

Answer ..... [3]

(c)

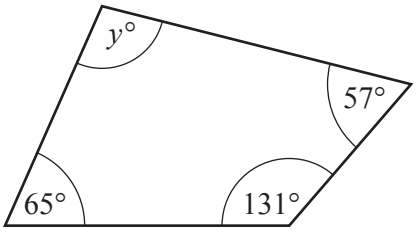

The angles in the quadrilateral are given correct to the nearest degree.

Find the lower bound for the value of y.

Answer ..... [2]

Section B [48 marks]

Answer **four** questions in this section.

Each question in this section carries 12 marks.

7 **(a)** **(i)** The points (4, −3) and (0, 5) lie on the line L.

Find the equation of line L.

Answer ..... [2]

(ii) The line M is parallel to line L and passes through the point (−2, 3).

Find the equation of line M.

Answer ..... [2]

(b) The table below shows some values of x and the corresponding values of y for $y = x + \frac{3}{x} - 3$.

x	0.5	1	1.5	2	3	4	5	6
y	3.5	1	0.5	0.5	1	1.75	2.6	

(i) Complete the table. [1]

(ii) Using a scale of 2 cm to 1 unit on both axes, draw a horizontal x-axis for $0 \leqslant x \leqslant 7$ and a vertical y-axis for $0 \leqslant y \leqslant 4$.

Draw the graph of $y = x + \frac{3}{x} - 3$ for $0.5 \leqslant x \leqslant 6$.

[3]

(iii) By drawing a tangent, estimate the gradient of the curve at (1, 1).

Answer ..... [2]

(iv) Use your graph to solve the equation $x + \frac{3}{x} = 5$.

Answer $x =$ ..... or ..... [2]

8 **[Volume of a cone = $\frac{1}{3}\pi r^2 h$]**

[Curved surface area of a cone = $\pi r l$]

[Volume of a sphere = $\frac{4}{3}\pi r^3$]

[Surface area of a sphere = $4\pi r^2$]

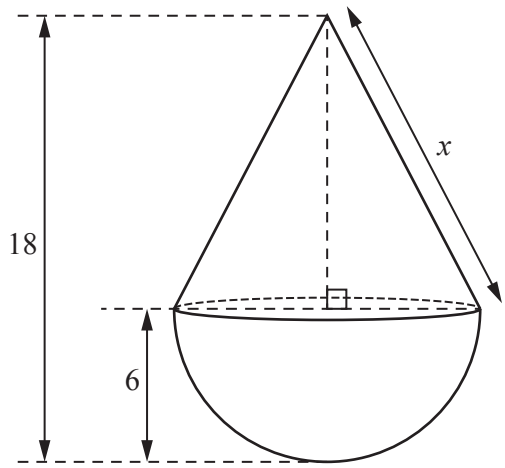

The diagram shows solid A which is made from a hemisphere joined to a cone of equal radius.
The hemisphere and the cone each have radius 6 cm.
The total height of the solid is 18 cm.

(a) Show that the slant height, x cm, of the cone is 13.4 cm, correct to 1 decimal place.

[2]

(b) Calculate the total surface area of solid A.

Answer ..... cm^2 [3]

(c) Calculate the volume of solid A.

Answer ..... cm^3 [3]

(d) Solid A is one of a set of three geometrically similar solids, A, B and C.
The ratio of the heights of solid A : solid B : solid C is 2 : 6 : 1.

(i) Calculate the surface area of solid B correct to 3 significant figures.

Answer ..... cm^2 [2]

(ii) Calculate the volume of solid C correct to 3 significant figures.

Answer ..... cm^3 [2]

9 **(a)** A pump takes 12 minutes to add 3000 litres of water to a pond.

How long will it take the same pump to add 1750 litres of water to a pond?

Answer ..... minutes [2]

(b) A tank holds 2500 litres of oil.
A small pump can add oil to the tank at a rate of x litres per minute.
A large pump can add oil to the tank at a rate of $(x + 20)$ litres per minute.

(i) Write down an expression, in terms of x, for the number of minutes the small pump takes to fill the empty tank.

Answer ..... [1]

(ii) It takes 15 minutes longer to fill the empty tank using the small pump than it does with the large pump.

Form an equation in x and show that it simplifies to $3x^2 + 60x - 10\,000 = 0$.

[3]

(iii) Solve the equation $3x^2 + 60x - 10\,000 = 0$.
Give each answer correct to 2 decimal places.

Answer $x =$ ..... or ..... [3]

(iv) Find the length of time the large pump takes to fill the empty tank.
Give your answer in minutes and seconds, correct to the nearest second.

Answer ..... minutes ..... seconds [3]

10 **(a)** Triangle A is shown on the grid.

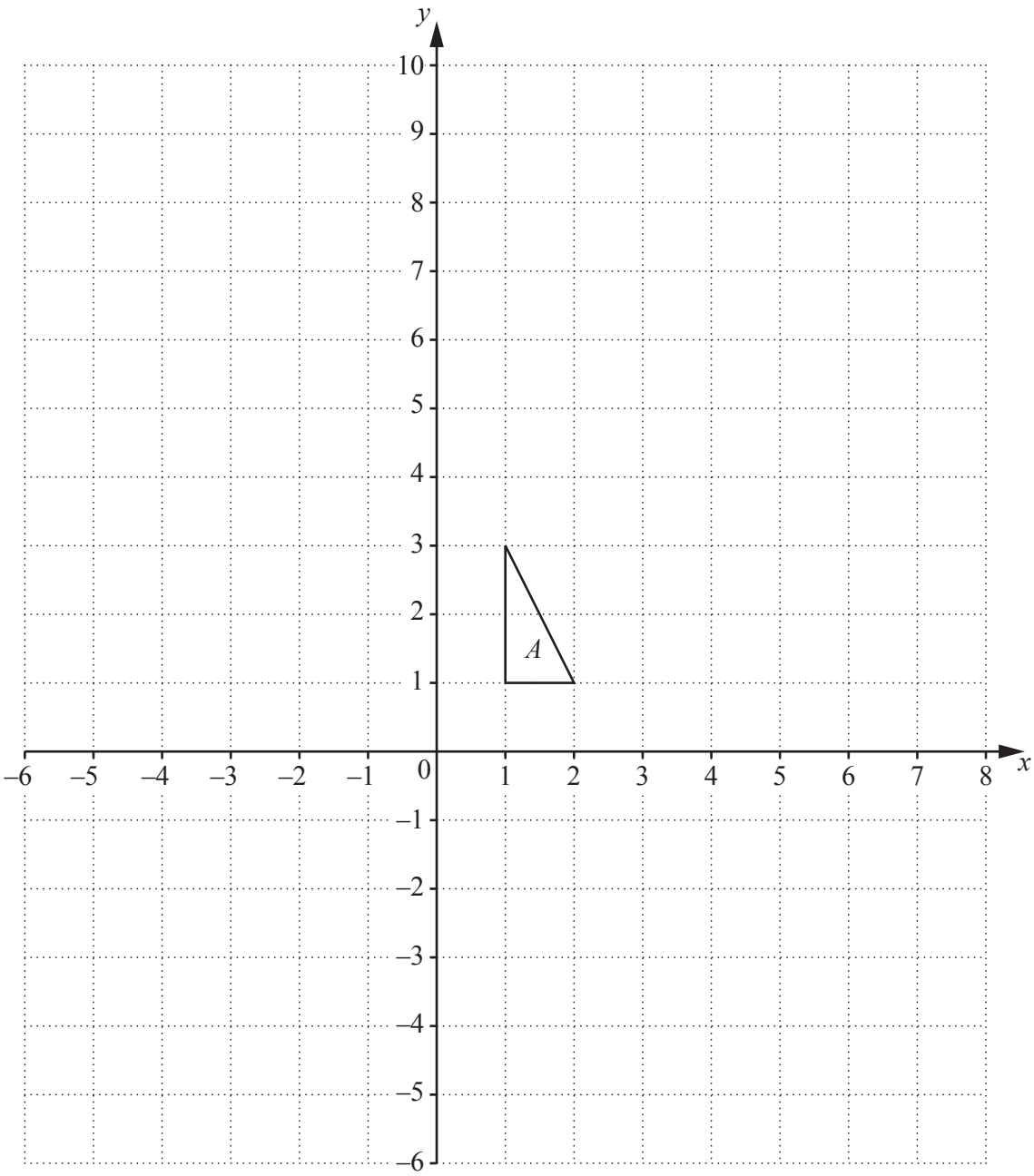

(i) Triangle A is mapped onto triangle B by a rotation of 180° about point (2, −1).

Draw and label triangle B on the grid. [2]

(ii) Triangle A is mapped onto triangle C by the transformation represented by the matrix $\begin{pmatrix} 3 & 0 \\ 0 & 3 \end{pmatrix}$.

Draw and label triangle C on the grid. [2]

(iii) Write down the matrix that represents the transformation that maps triangle C onto triangle A.

Answer $\begin{pmatrix} & \\ & \end{pmatrix}$ [1]

(iv) Describe fully the **single** transformation that maps triangle C onto triangle B.

.....

..... [3]

(b) The diagram shows triangle PRS.

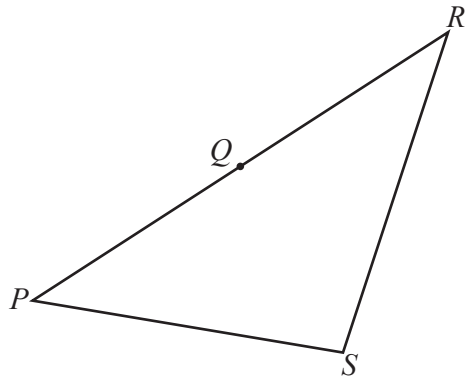

Q is the midpoint of PR.

$\overrightarrow{PQ} = \begin{pmatrix} 6 \\ 3 \end{pmatrix}$ and $\overrightarrow{PS} = \begin{pmatrix} 8 \\ -2 \end{pmatrix}$.

(i) Find $\overrightarrow{SR}$.

Answer $\begin{pmatrix} \\ \end{pmatrix}$ [2]

(ii) T is the point on SR such that $ST : TR = 1 : 3$.

Find $\overrightarrow{PT}$.

Answer $\begin{pmatrix} \\ \end{pmatrix}$ [2]

11

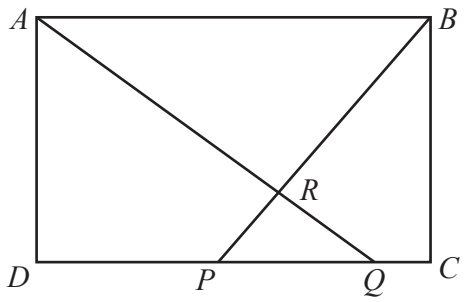

ABCD is a rectangle.
P and *Q* are points on *DC*.
AQ and *BP* intersect at *R*.

(a) Prove that triangle *ARB* is similar to triangle *QRP*.
Give a reason for each statement you make.

.....

.....

.....

.....

..... [3]

(b)

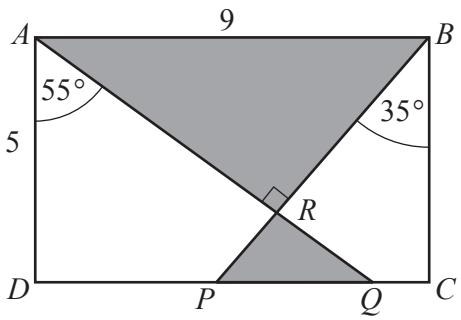

In rectangle *ABCD*, $AB = 9$ cm and $AD = 5$ cm.
$D\hat{A}Q = 55°$, $C\hat{B}P = 35°$ and *AQ* is perpendicular to *BP*.

(i) Calculate *AQ*.

Answer ..... cm [2]

(ii) Calculate AR.

Answer ..... cm [2]

(iii) Calculate the area of triangle ARB.

Answer ..... cm^2 [2]

(iv) Calculate the total area shaded in the rectangle.

Answer ..... cm^2 [3]

© UCLES 2017

BLANK PAGE

Permission to reproduce items where third-party owned material protected by copyright is included has been sought and cleared where possible. Every reasonable effort has been made by the publisher (UCLES) to trace copyright holders, but if any items requiring clearance have unwittingly been included, the publisher will be pleased to make amends at the earliest possible opportunity.

To avoid the issue of disclosure of answer-related information to candidates, all copyright acknowledgements are reproduced online in the Cambridge International Examinations Copyright Acknowledgements Booklet. This is produced for each series of examinations and is freely available to download at www.cie.org.uk after the live examination series.

Cambridge International Examinations is part of the Cambridge Assessment Group. Cambridge Assessment is the brand name of University of Cambridge Local Examinations Syndicate (UCLES), which is itself a department of the University of Cambridge.

© UCLES 2017