Cambridge Assessment International Education

Cambridge O Level

CANDIDATE NAME	

CENTRE NUMBER						CANDIDATE NUMBER				

7291062685

MATHEMATICS (SYLLABUS D) **4024/21**

Paper 2 **May/June 2023**

2 hours 30 minutes

You must answer on the question paper.

You will need: Geometrical instruments

INSTRUCTIONS

- Answer **all** questions.
- Use a black or dark blue pen. You may use an HB pencil for any diagrams or graphs.
- Write your name, centre number and candidate number in the boxes at the top of the page.
- Write your answer to each question in the space provided.
- Do **not** use an erasable pen or correction fluid.
- Do **not** write on any bar codes.
- You should use a calculator where appropriate.
- You may use tracing paper.
- You must show all necessary working clearly.
- Give non-exact numerical answers correct to 3 significant figures, or 1 decimal place for angles in degrees, unless a different level of accuracy is specified in the question.
- For π, use either your calculator value or 3.142.

INFORMATION

- The total mark for this paper is 100.
- The number of marks for each question or part question is shown in brackets [ ].

This document has **24** pages. Any blank pages are indicated.

DC (CE/SG) 315945/3
© UCLES 2023

1

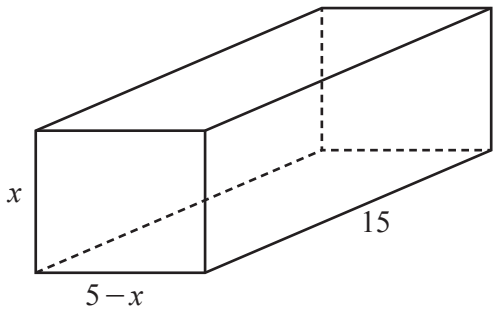

A cuboid has dimensions x cm, $(5-x)$ cm and 15 cm.

(a) Show that the equation for the volume of the cuboid, y cm^3, is $y = 75x - 15x^2$.

[1]

(b) Complete the table of values for $y = 75x - 15x^2$.

x	1	1.5	2	2.5	3	3.5	4
y	60	78.75	90		90	78.75	60

[1]

(c) Draw the graph of $y = 75x - 15x^2$ for $1 \leqslant x \leqslant 4$.

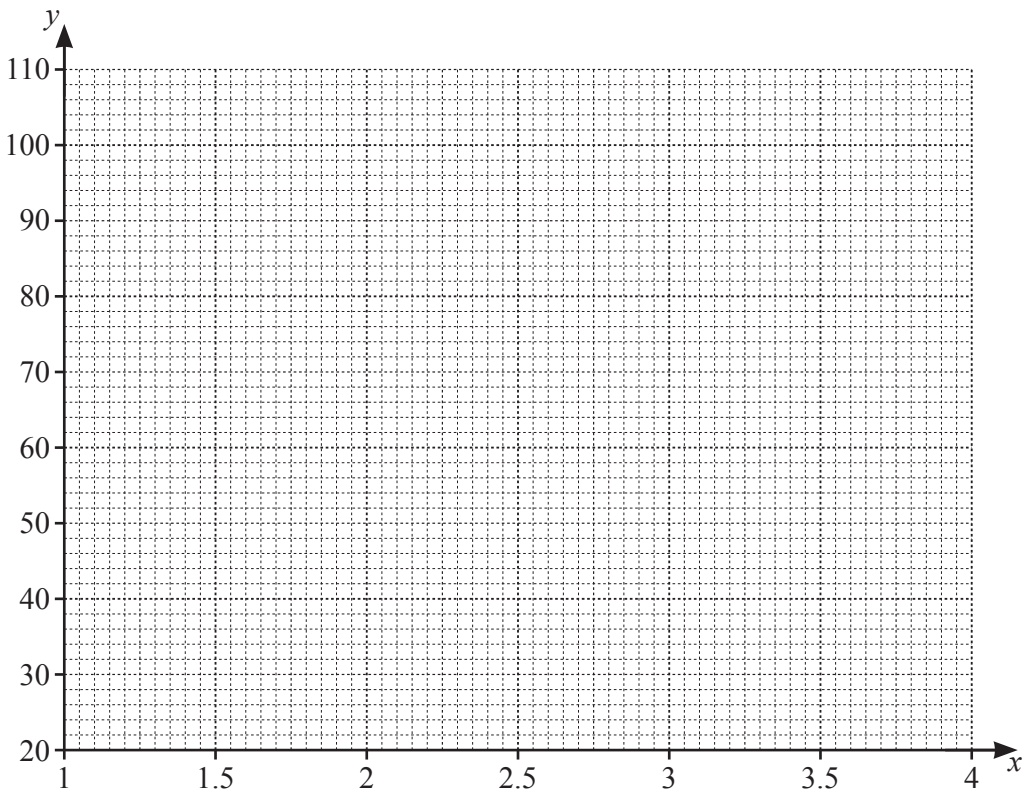

[3]

(d) [Volume of pyramid $= \frac{1}{3} \times$ base area $\times$ height]

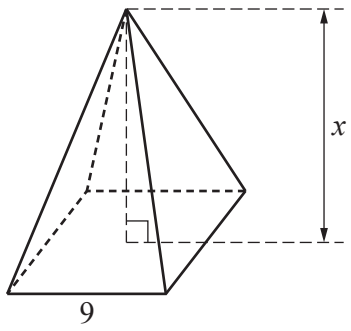

The diagram shows a pyramid with a square base of side length 9 cm.
The pyramid has height x cm and volume y cm^3.

(i) Show that the equation for the volume of the pyramid is $y = 27x$.

[1]

(ii) By drawing a suitable straight line on the grid on page 2, find the height of the pyramid when the pyramid and the cuboid have the same volume.

..... cm [3]

2 **(a)** Filomena starts work at 10.45 am on Monday.
She finishes work 2 hours 50 minutes later.

Find the time she finishes work on Monday.

..... [1]

(b) Xavier works for 5 days each week.
He works for $4\frac{1}{2}$ hours on each of the 5 days.

(i) Each week he earns \$261.

Calculate the hourly rate he is paid.

\$ ..... [1]

(ii) One day, the length of time Xavier works decreases by 20%.

Calculate the length of time he works that day.
Give your answer in hours and minutes.

..... hours ..... minutes [2]

© UCLES 2023

(c) In 2021, Miguel's income was \$32 000.
In 2022, his income increased to \$33 408.

Calculate the percentage increase in his income from 2021 to 2022.

..... % [2]

(d) Miguel invests \$$x$ in an account paying simple interest at a rate of 1.2% per year.
At the end of 3 years, he has \$890.96 in the account.

Calculate the value of x.

$x =$ ..... [2]

3 (a)

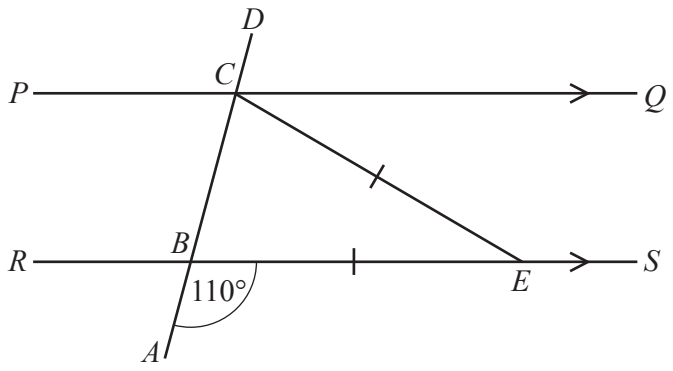

NOT TO SCALE

PQ is parallel to RS.
$ABCD$ is a straight line.
$BE = CE$ and $A\hat{B}E = 110°$.

Calculate $E\hat{C}Q$, giving a reason for each step of your working.

$E\hat{C}Q =$ ..... because .....

.....

.....

..... [3]

(b)

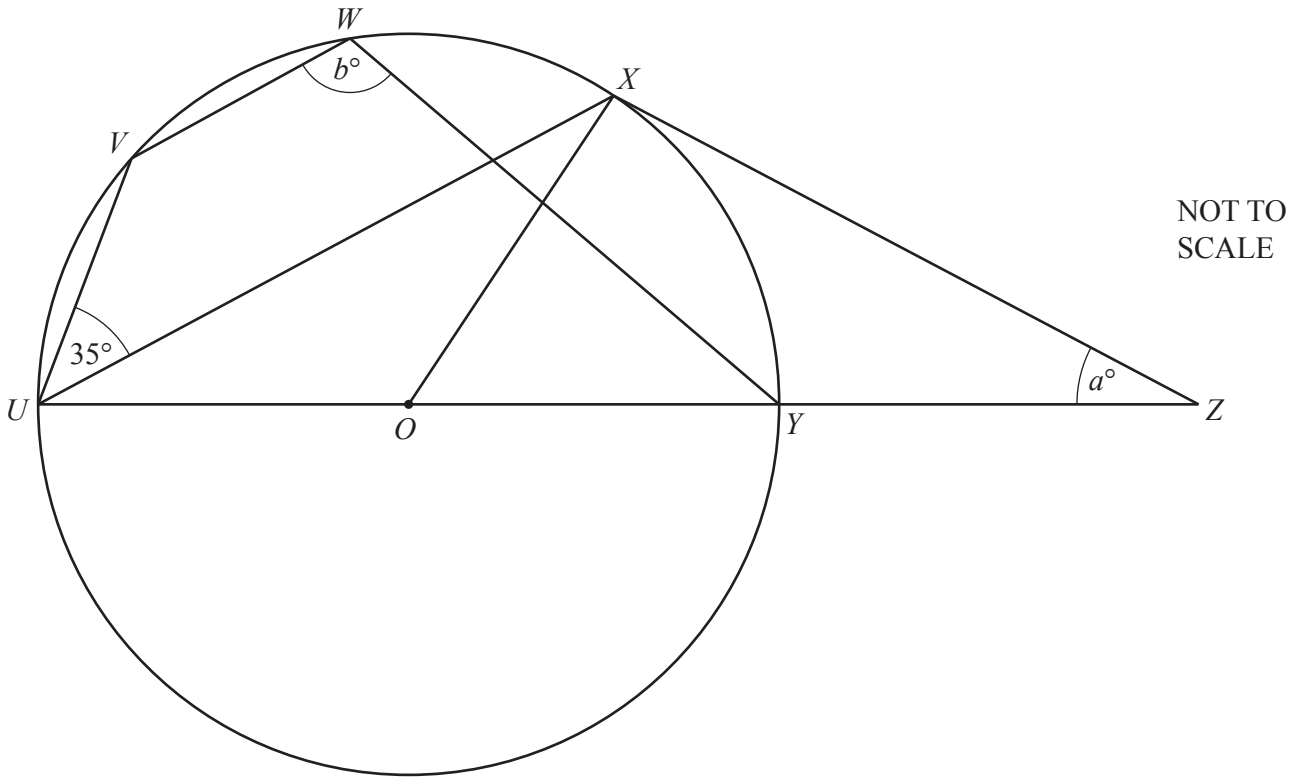

U, V, W, X and Y are points on the circumference of a circle, centre O.
UY is a diameter of the circle and ZX is a tangent to the circle at X.
$V\hat{U}X = 35°$, $X\hat{Z}Y = a°$ and $V\hat{W}Y = b°$.

Find an expression for b in terms of a.
Give your answer in its simplest form.

$b =$ ..... [4]

4 The cumulative frequency diagram shows the amount of fuel, f litres, bought by 100 customers at a service station one day.

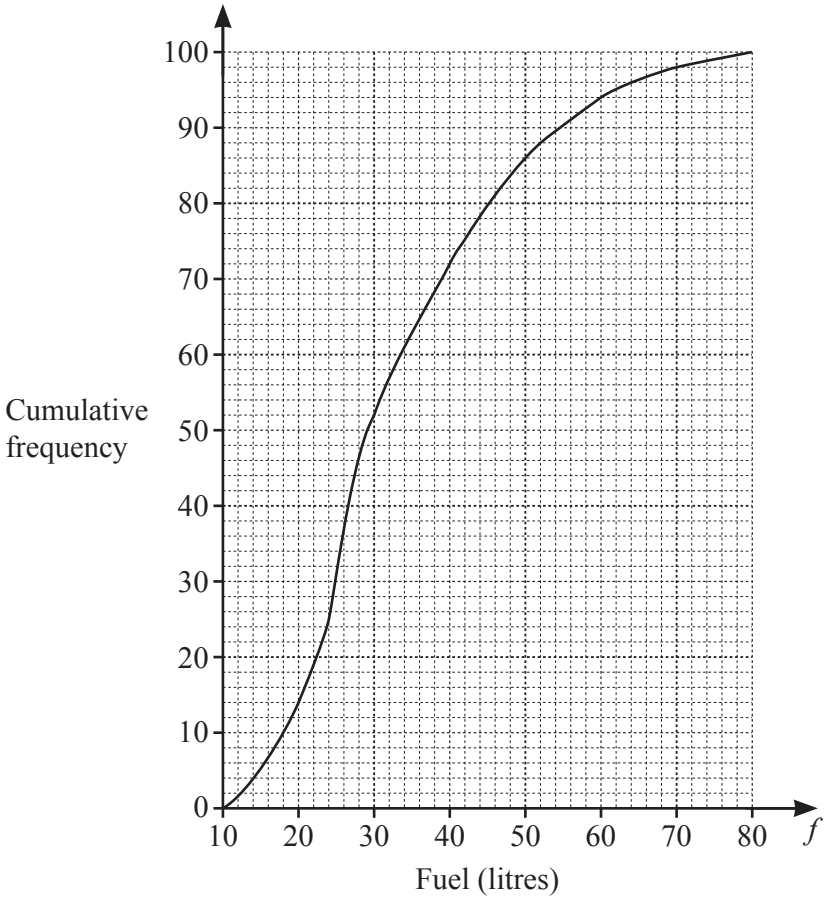

(a) Use the diagram to estimate

(i) the median

..... litres [1]

(ii) the interquartile range.

..... litres [2]

(b) That day the price of a litre of fuel at the service station was \$1.75 .

Use the diagram to find the fraction of customers who spent more than \$91.00 on fuel.

..... [3]

(c) Complete the frequency table for the amount of fuel bought by these 100 customers.

Amount of fuel (f litres)	$10 < f \leqslant 20$	$20 < f \leqslant 30$	$30 < f \leqslant 40$	$40 < f \leqslant 50$	$50 < f \leqslant 60$	$60 < f \leqslant 70$	$70 < f \leqslant 80$
Frequency	14	38	20				

[2]

5 **(a)** $\mathscr{E} = \{1, 2, 3, 4, 5, 6, 7, 8, 9, 10, 11, 12\}$
$P = \{x : x \text{ is a multiple of } 3\}$
$Q = \{x : x \text{ is an odd number}\}$
$R = \{ x : x \text{ is a factor of } 24\}$

(i) Complete the Venn diagram.

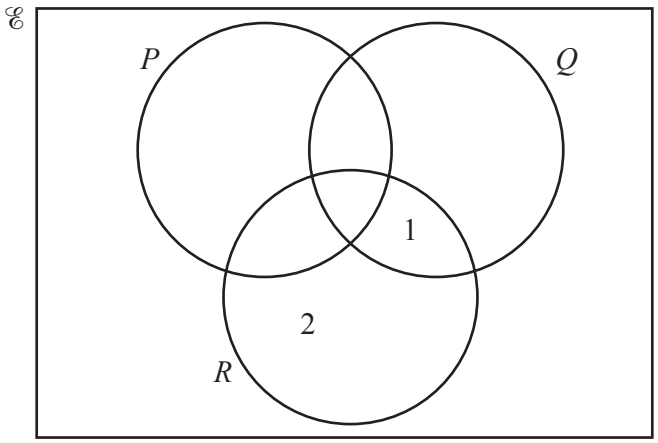

[3]

(ii) Find $n(R')$.

..... [1]

(iii) List the elements of $(P \cup R) \cap Q$.

..... [1]

(iv) Describe, in words, the type of number represented by $P \cap R \cap Q'$.

.....

..... [1]

(v) A number, m, is chosen at random from the elements of R.

Find the probability that m is a multiple of 3.

..... [2]

(b) $M = 2^{2x} \times 3^4 \times 5 \times 7$
$N = 2^3 \times 3^{x-y} \times 5^2$

The lowest common multiple (LCM) of M and N is $2^8 \times 3^6 \times 5^2 \times 7$.

(i) Find the value of x and the value of y.

$x =$ .....

$y =$ ..... [2]

(ii) Find the largest square number that is a factor of M.

..... [1]

(iii) Find the highest common factor (HCF) of M and N.
Give your answer as a product of its prime factors.

..... [1]

6 **(a)** Simplify $3u - 6w - 5u + 9w$.

..... [2]

(b) Emilio buys m pencils at 40 cents each and 12 pens at 85 cents each.
He pays \$20 and receives \$2.20 change.

Form an equation in m and solve it to find the number of pencils Emilio buys.
Show your working.

..... pencils [4]

(c) y is directly proportional to the cube of $(x - 2)$.
When $y = 12$, $x = 4$.

Find y when $x = 5$.

$y =$ ..... [2]

(d) Write as a single fraction in its simplest form.

$$\frac{3}{x-1} - \frac{4}{2x+1}$$

..... [3]

7 **(a)** ABC is a triangle with $AC = 8.3$ cm and $B\hat{A}C = 105°$.

(i) Construct triangle ABC.
Line AB has been drawn for you.

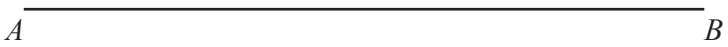

[2]

(ii) By taking suitable measurements from your triangle, calculate the perimeter of triangle ABC.

..... cm [2]

(b)

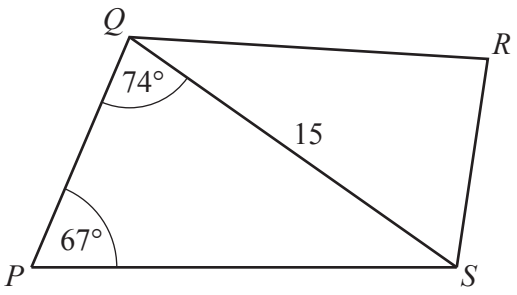

NOT TO SCALE

The diagram shows quadrilateral $PQRS$.
$SQ = 15\,\text{cm}$, $S\hat{P}Q = 67°$ and $P\hat{Q}S = 74°$.

(i) Calculate PS.

..... cm [3]

(ii) $P\hat{S}R = 96°$ and the area of triangle QRS is $63\,\text{cm}^2$.

(a) Show that $SR = 10.0\,\text{cm}$, correct to 1 decimal place.

[3]

(b) Calculate QR.

..... cm [3]

8 **(a)** Maya leaves the office for a factory visit.
The distance–time graph shows her journey from the office to the factory.

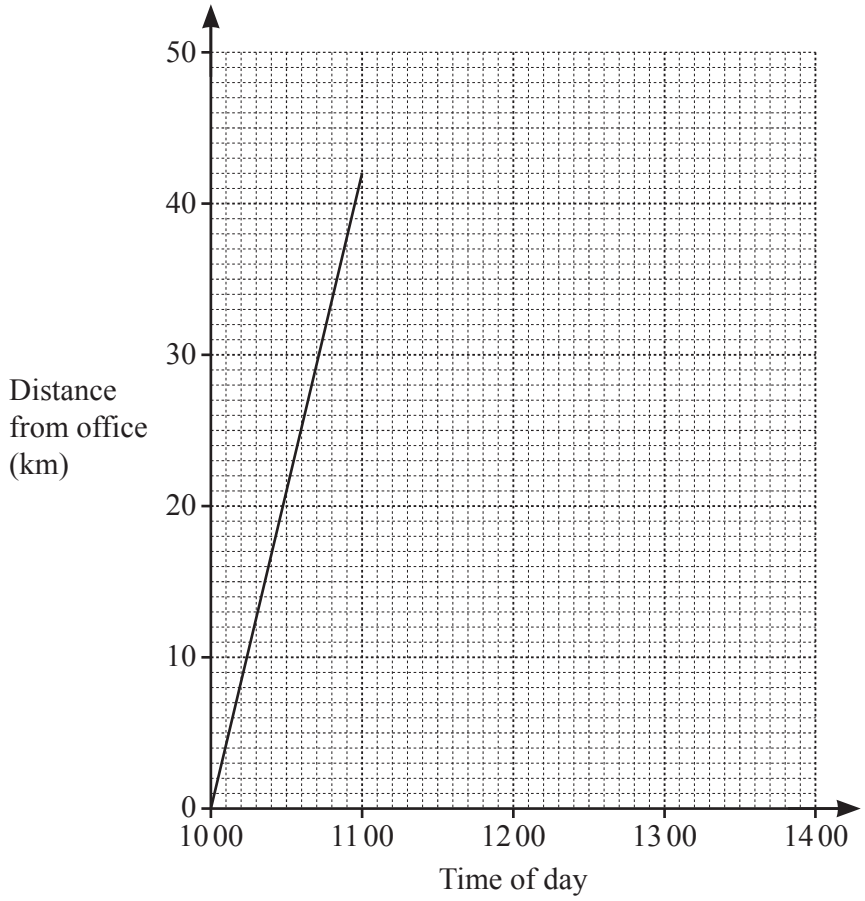

(i) Maya stays at the factory for $1\frac{1}{2}$ hours.
She then returns to the office at an average speed of 35 km/h.

Complete the distance–time graph to show this information. [2]

(ii) Use your graph to find the time Maya arrives back at the office.

..... [1]

(b) The diagram shows the distance–time graph for the journey of a cyclist.
The cyclist travels d metres from home to a lake and then returns home.

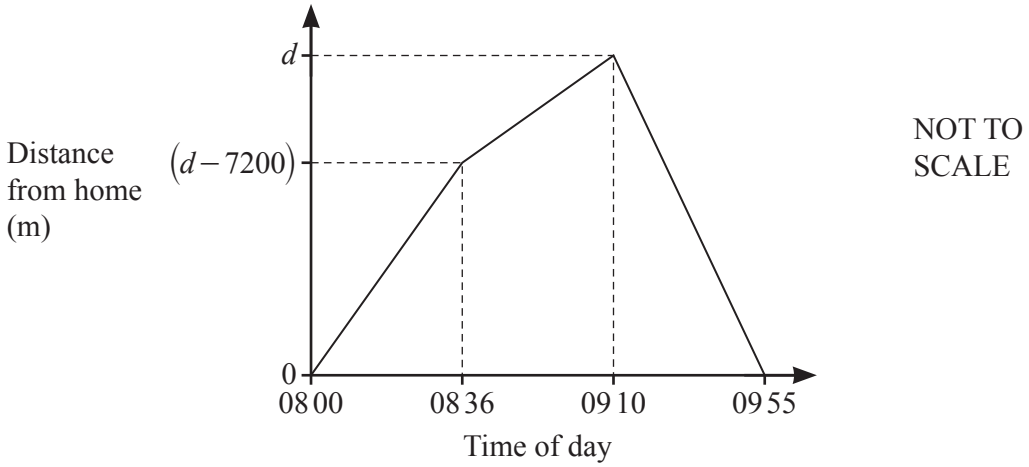

At 08 36 the cyclist is $(d - 7200)$ metres from home.
The average speed of the cyclist between 08 00 and 08 36 is $\frac{4}{5}$ of the average speed of the cyclist between 09 10 and 09 55.

Calculate the value of d.

$d =$ ..... [3]

9 The Bukhari family and the Garcia family are going on holiday.

In the Bukhari family there are 2 adults and 3 children.
In the Garcia family there are 4 adults and 1 child.

(a) Complete matrix **M** to represent this information.

$$\begin{array}{cc} & \begin{array}{cc} \text{Adults} & \text{Children} \end{array} \\ \mathbf{M} = & \begin{pmatrix} \quad & \quad \\ \quad & \quad \end{pmatrix} \begin{array}{l} \text{Bukhari} \\ \\ \text{Garcia} \end{array} \end{array}$$

[1]

(b) The cost of a flight for each adult is \$$x$ and the cost of a flight for each child is \$$y$.

The matrix $\mathbf{N} = \begin{pmatrix} x \\ y \end{pmatrix}$ shows this information.

The matrix $\mathbf{P} = \mathbf{MN} = \begin{pmatrix} 525 \\ 575 \end{pmatrix}$.

(i) Using an algebraic method, find the value of x and the value of y.
Show your working.

$x =$ .....

$y =$ ..... [5]

(ii) Explain what each element in **P** represents.

.....

..... [1]

10 Bags of sweets are packed into boxes.

(a) A box is opened and the number of sweets in each bag is counted.
The results are shown in the table.

Number of sweets	11	12	13	14	15
Frequency	15	26	38	p	9

(i) Explain why the total number of bags in the box cannot be 87.

.....

..... [1]

(ii) The mean number of sweets per bag in this box is 12.8 .

Find the value of p.

$p =$ ..... [3]

(b) Another box is opened and the number of sweets in each bag is counted.
The results are shown in the table.

Number of sweets	11	12	13	14	15
Frequency	12	28	39	r	9

A bag of sweets is chosen at random from this box and not replaced.
A second bag of sweets is then chosen at random from the same box.
The probability that both bags contain 15 sweets is $\frac{4}{539}$.

(i) Show that $r^2 + 175r - 2046 = 0$.

[3]

(ii) Solve $r^2 + 175r - 2046 = 0$ to find the value of r.
Show your working.

$r =$ ..... [3]

11

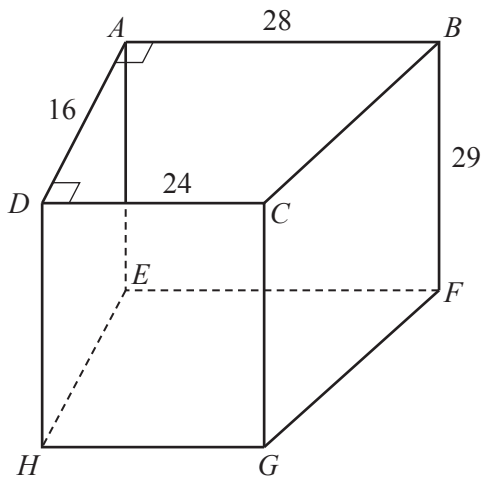

The diagram shows an open container on a horizontal surface.
The container is a prism with trapezium *ABCD* as its cross-section.
$AB = 28$ cm, $DC = 24$ cm, $AD = 16$ cm and $BF = 29$ cm.
Angle *ADC* and angle *DAB* are right angles.

(a) Calculate angle *DCB*.

Angle *DCB* = ... [3]

(b) Khalil pours water into the empty container at a rate of 4000 cm^3/minute for 2 minutes.
He says that the container is now more than two thirds full.

Is he correct?
Show your working.

[3]

(c) Calculate angle *DFH*.

Angle *DFH* = ... [3]

BLANK PAGE

Permission to reproduce items where third-party owned material protected by copyright is included has been sought and cleared where possible. Every reasonable effort has been made by the publisher (UCLES) to trace copyright holders, but if any items requiring clearance have unwittingly been included, the publisher will be pleased to make amends at the earliest possible opportunity.

To avoid the issue of disclosure of answer-related information to candidates, all copyright acknowledgements are reproduced online in the Cambridge Assessment International Education Copyright Acknowledgements Booklet. This is produced for each series of examinations and is freely available to download at www.cambridgeinternational.org after the live examination series.

Cambridge Assessment International Education is part of Cambridge Assessment. Cambridge Assessment is the brand name of the University of Cambridge Local Examinations Syndicate (UCLES), which is a department of the University of Cambridge.

© UCLES 2023