Cambridge O Level

Cambridge Assessment International Education
Cambridge Ordinary Level

CANDIDATE NAME	

CENTRE NUMBER						CANDIDATE NUMBER				

* 9 3 2 5 9 6 1 3 6 4 *

MATHEMATICS (SYLLABUS D) **4024/22**

Paper 2 **May/June 2019**

2 hours 30 minutes

Candidates answer on the Question Paper.

Additional Materials: Geometrical instruments
Electronic calculator

READ THESE INSTRUCTIONS FIRST

Write your centre number, candidate number and name on all the work you hand in.
Write in dark blue or black pen.
You may use an HB pencil for any diagrams or graphs.
Do not use staples, paper clips, glue or correction fluid.
DO **NOT** WRITE IN ANY BARCODES.

Answer **all** questions.
If working is needed for any question it must be shown below that question.
Essential working must be shown for full marks to be awarded.

Electronic calculators should be used.
If the degree of accuracy is not specified in the question, and if the answer is not exact, give the answer to three significant figures. Give answers in degrees to one decimal place.
For π, use either your calculator value or 3.142, unless the question requires the answer in terms of π.

At the end of the examination, fasten all your work securely together.
The number of marks is given in brackets [ ] at the end of each question or part question.
The total number of marks for this paper is 100.

This document consists of **20** printed pages.

© UCLES 2019

1 The table below shows the cost to visit a zoo.

Adult	\$26.00
Child (Age 5 to 16)	\$15.50
Child (Under 5)	Free

(a) On 30th April, Mr and Mrs Ferugio and their three children aged 12, 8 and 3 visit the zoo.

What is the **total** cost for the family?

\$ ..... [1]

(b) In May, the cost for a child is not changed.
The cost for an adult is reduced by p% to \$22.10.

(i) Calculate p.

p = ... [2]

(ii) In May, the Ferugio family visit the zoo again.

Calculate the percentage reduction in the total cost from April to May.

..... % [3]

(c) The Ferugio family arrived at the zoo at 10.50 am.
They stayed at the zoo until 4.25 pm.

(i) How long, in hours and minutes, did they spend at the zoo?

..... hours ..... minutes [1]

(ii) The zoo holds daily shows about different animals.

Daily Show	Time
Giraffe	10.00 am
Rhino	11.30 am
Hippo	12.30 pm
Tiger	1.45 pm
Lemur	3.00 pm
Crocodile	4.30 pm

The Ferugio family go to as many shows as they can during their visit.
Each show lasts 35 minutes.

How many minutes do they spend at these shows?

..... minutes [2]

2 The table shows the average monthly temperatures (°C) in Tokyo and in Sydney one year.

Month	Jan	Feb	Mar	Apr	May	Jun	Jul	Aug	Sep	Oct	Nov	Dec
Temperature in Sydney (°C)	23	23	22	19	16	14	13	14	16	18	20	21
Temperature in Tokyo (°C)	5	6	9	14	18	21	25	26	23	18	12	8

(a) Complete the scatter diagram.
The first eight points have been plotted for you. [2]

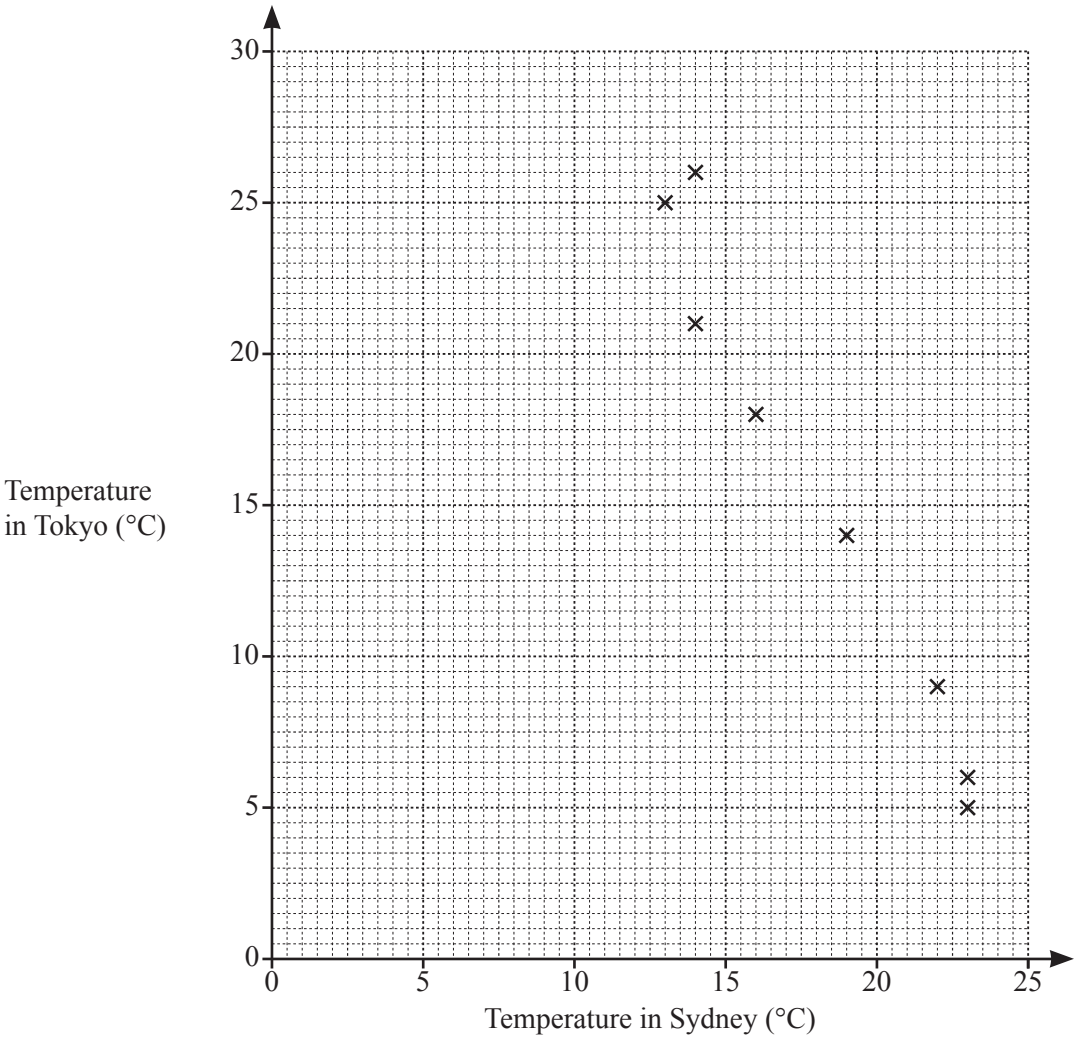

(b) What type of correlation is shown by the scatter diagram?

..... [1]

(c) Draw a line of best fit. [1]

(d) The following year, the average temperature in Sydney during May was 15 °C.

By using your line of best fit, estimate the average temperature in Tokyo that May.

..... °C [1]

3 **(a)** Represent the inequality $-3 < x \leqslant 2$ on the number line below.

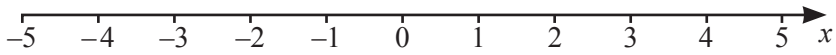

[1]

(b)

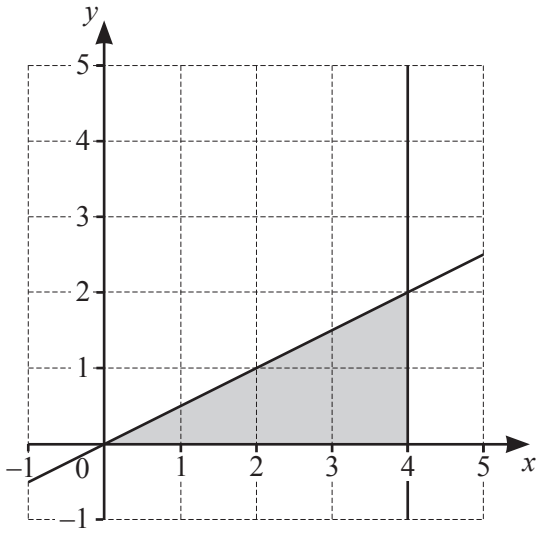

Find the 3 inequalities which define the region **shaded** in the diagram.

.....

.....

..... [3]

(c) Solve $-12 \leqslant 4(m-2) < 10$.

..... [3]

4 **(a)**

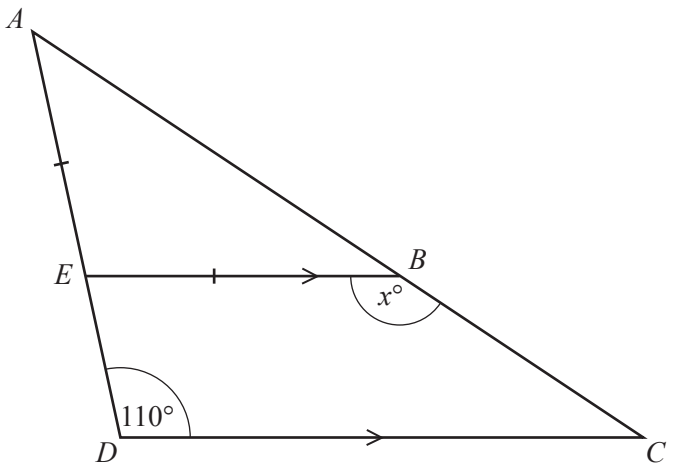

NOT TO SCALE

ACD is a triangle and $A\hat{D}C = 110°$.
EB is parallel to DC and $AE = EB$.

(i) Find x, giving reasons for each step in your working.

[3]

(ii) Given that $EB = 12$ cm and $DC = 20$ cm, find ED.

$ED =$ ..... cm [1]

(b)

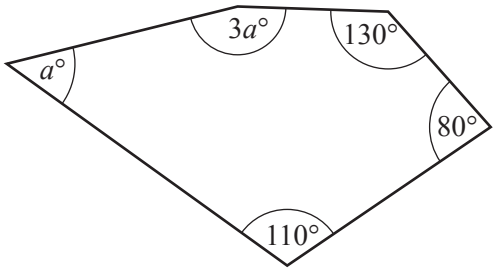

NOT TO SCALE

Find the value of a.

a = ... [2]

(c)

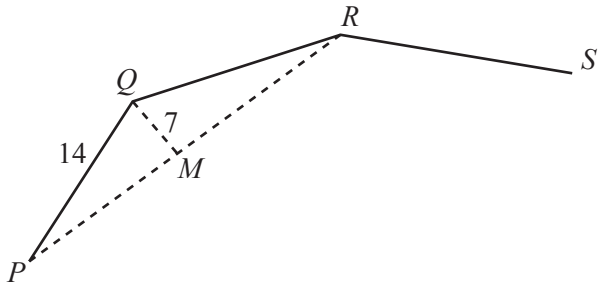

NOT TO SCALE

P, Q, R and S are vertices of a regular polygon.
M is the midpoint of PR.
$PQ = 14$ cm and $QM = 7$ cm.

How many sides has the polygon?
Show your working.

..... [4]

5 **(a)** Express as a single fraction, in its simplest form.

(i) $\frac{3a}{4b} - \frac{a}{6b}$

..... [2]

(ii) $\frac{b^2 - 9}{6} \times \frac{2}{b-3}$

..... [2]

(b) Solve $3x = 1 - 5(x + 4)$.

$x =$ ..... [2]

(c)

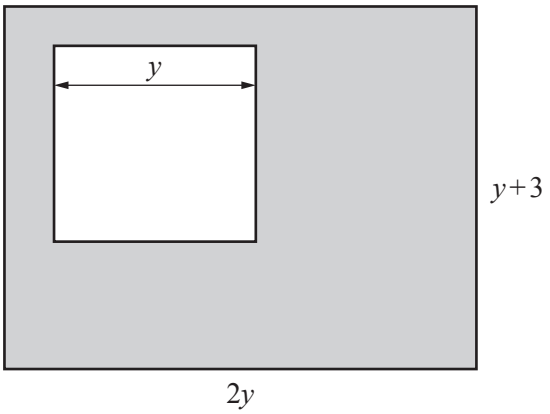

NOT TO SCALE

A rectangular card has dimensions $(2y)$ cm by $(y + 3)$ cm.
A square of side y cm is cut from this rectangle.
The card remaining, shown shaded in the diagram, has an area of 55 cm^2.

Form an equation in y and solve it to find the dimensions of the rectangular card.
Show all your working.

..... cm by ..... cm [5]

6

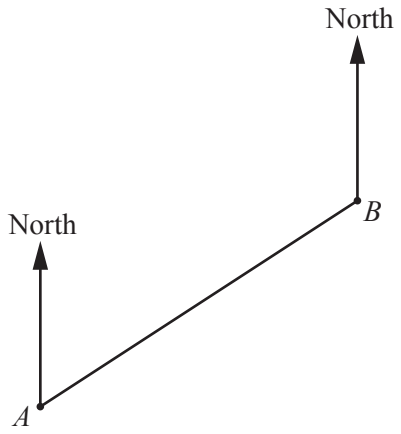

The diagram shows the positions of two boats, A and B, drawn to a scale of $1 : m$.
The actual distance between the two boats is 4 km.

(a) Find m, giving your answer correct to 1 significant figure.

$m =$ ..... [2]

(b) Measure the bearing of A from B.

..... [1]

(c) A third boat is positioned at C.
C is on a bearing of 120° from A and on a bearing of 195° from B.

Find and label C on the diagram. [2]

(d) Find, by measurement, the actual distance in kilometres from A to C.

..... km [2]

(e)

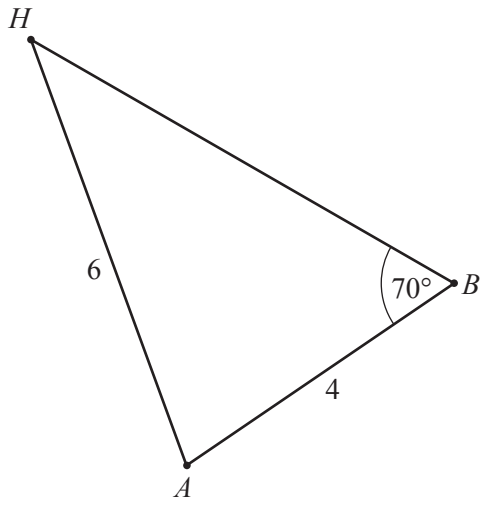

NOT TO SCALE

The diagram shows the positions of the boats, A and B, and a harbour, H.
$AB = 4$ km, $AH = 6$ km and $A\hat{B}H = 70°$.

(i) Calculate $A\hat{H}B$.

$A\hat{H}B =$ ..... [3]

(ii) The boat at A travels in a straight line to the harbour at H.
The average speed of the boat is p km/h.
It takes 12 minutes 20 seconds for the boat to travel from A to H.

Calculate p.

$p =$ ..... [3]

7 The table shows some values for $y = 1 + \frac{2}{x}$, given correct to 2 decimal places where appropriate.

x	0.5	1	2	3	4	5	6	7	8
y	5	3	2	1.67	1.5	1.4	1.33	1.29	

(a) Complete the table. [1]

(b) Draw the graph of $y = 1 + \frac{2}{x}$ for $0.5 \leqslant x \leqslant 8$.

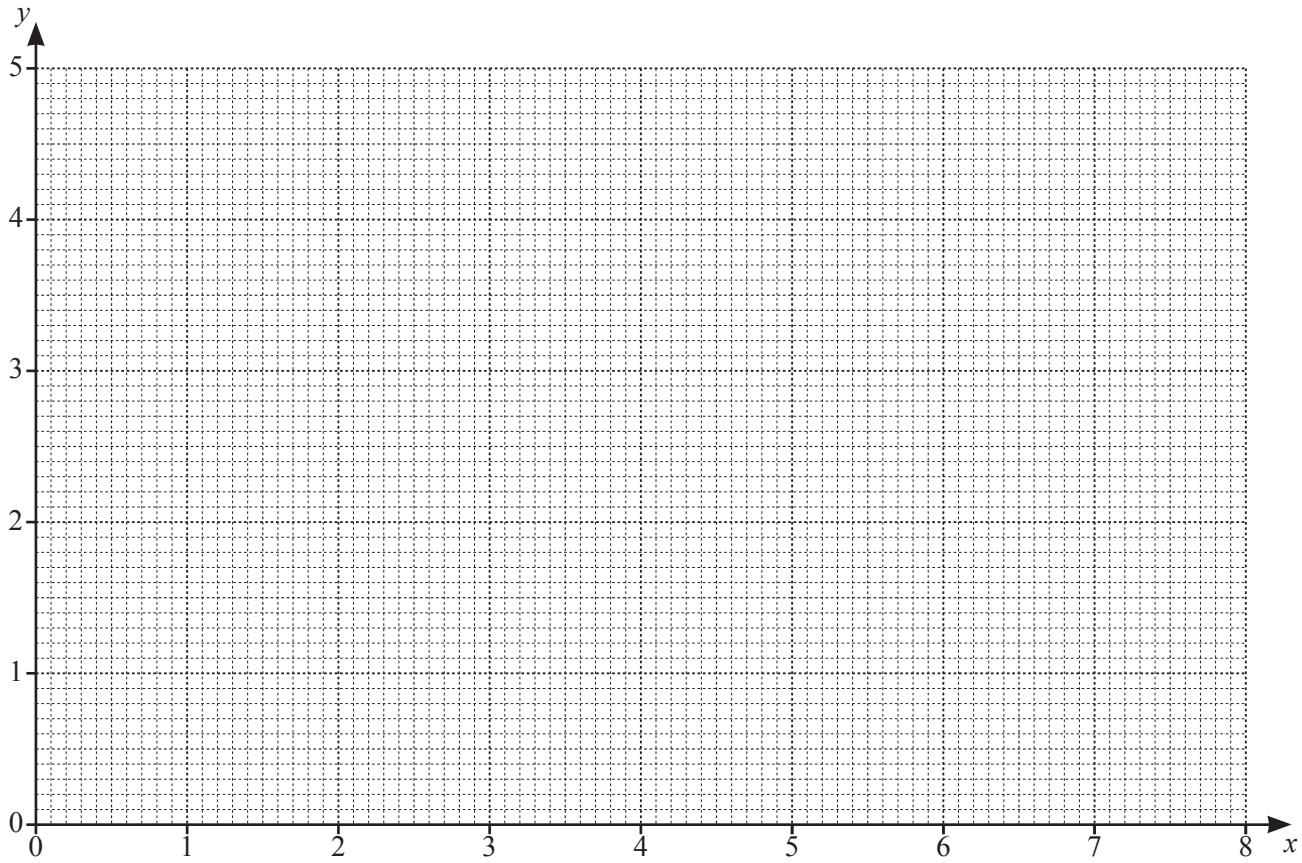

[2]

(c) The line L crosses the graph of $y = 1 + \frac{2}{x}$ at $x = 2$ and $x = 5$.

Find the equation of L.

..... [3]

(d) A line with gradient $-\frac{1}{3}$ crosses the graph of $y = 1 + \frac{2}{x}$ when $x = 1$ and when $x = k$.

By drawing a suitable line on your grid, find k.

$k =$ ..... [2]

8 The mass, in grams, of each of 75 oranges is measured.
The results are summarised in the table.

Mass (m g)	Frequency
$160 < m \leqslant 170$	4
$170 < m \leqslant 180$	10
$180 < m \leqslant 190$	15
$190 < m \leqslant 200$	23
$200 < m \leqslant 210$	18
$210 < m \leqslant 220$	5

(a) One of these oranges is chosen at random.

Find the probability that it has a mass greater than 200 g.

..... [1]

(b) Calculate an estimate of the mean mass.

..... g [3]

(c) On the grid on the next page, draw a cumulative frequency diagram for the mass of the oranges.

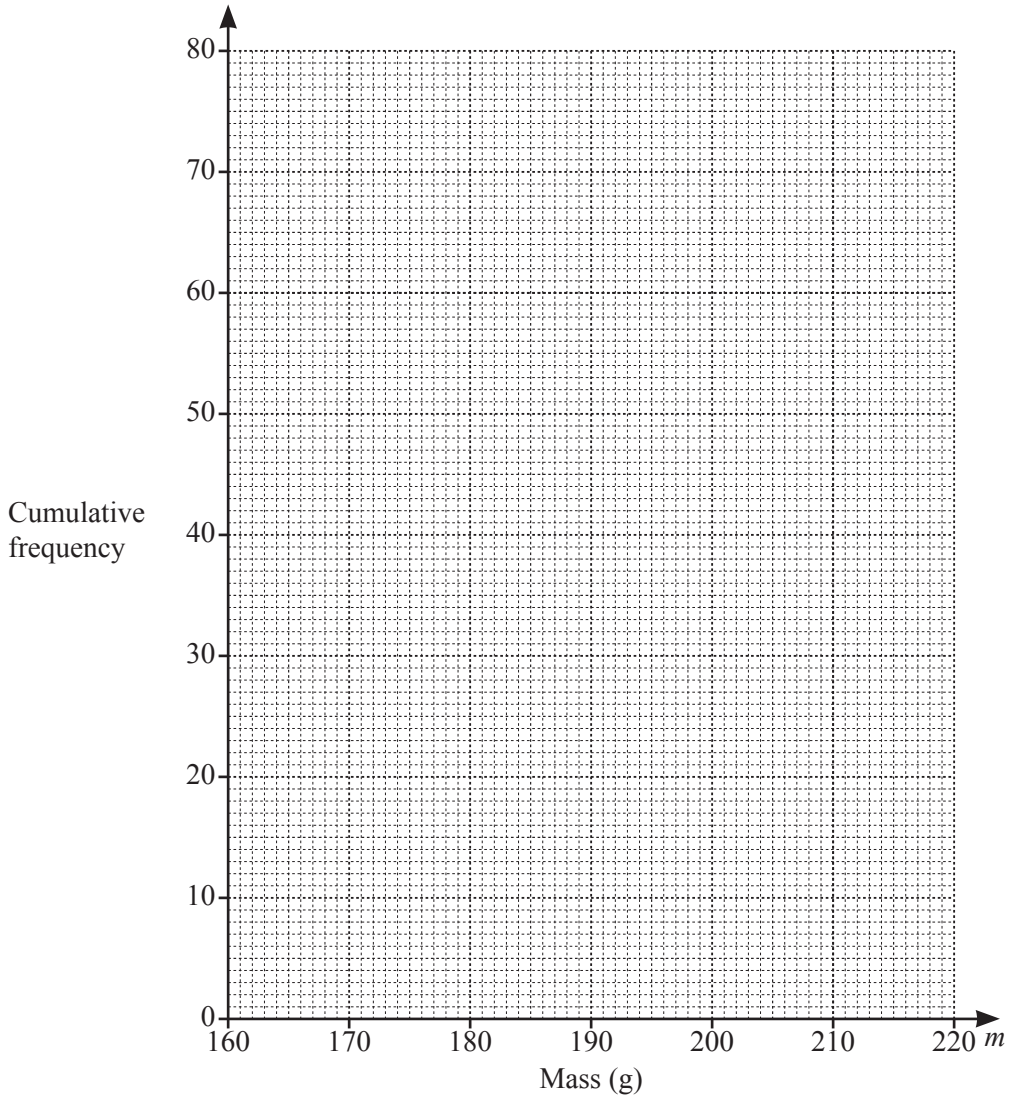

[3]

(d) Use your graph to find an estimate for the median.

..... g [1]

(e) Oranges with a mass of more than T g are labelled 'Class A'.
20% of the oranges are labelled 'Class A'.

Use your graph to find T.

T = ... [2]

(f) Oranges with a mass of 178 g or less are used to make orange juice.

Use your graph to find an estimate for the number of these oranges that are used to make orange juice.

..... [1]

9

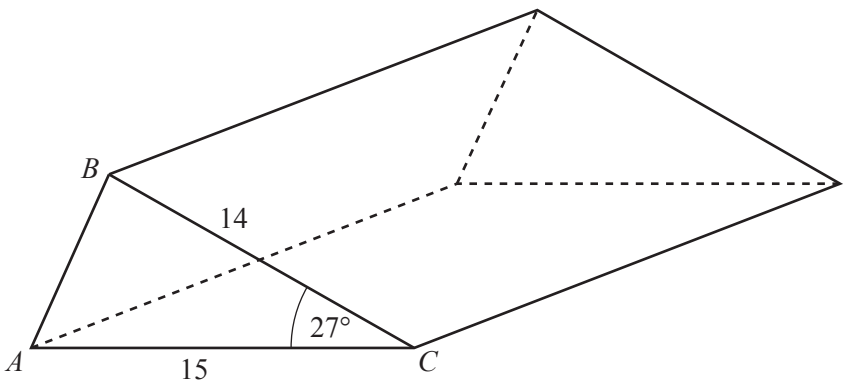

The diagram shows a triangular prism.
$AC = 15$ cm, $BC = 14$ cm and angle $ACB = 27°$.

(a) Calculate AB.

$AB =$ ..... cm [3]

(b) The length of the prism is p cm and the volume of the prism is $1000\,\text{cm}^3$.

Calculate p.

$p =$ ..... [3]

(c) The prism is to be packed in a carton.
The carton is a cuboid of size 15 cm by p cm by h cm.

Calculate the smallest possible value of h.

$h =$ ..... [2]

10 **(a)** $\mathbf{f} = \begin{pmatrix} 4 \\ -3 \end{pmatrix}$ $\mathbf{g} = \begin{pmatrix} 1 \\ -5 \end{pmatrix}$

(i) Find $\mathbf{g} - 2\mathbf{f}$.

$\begin{pmatrix} \quad \\ \quad \end{pmatrix}$ [1]

(ii) Petra writes $|\mathbf{f}| > |\mathbf{g}|$.

Show that Petra is wrong.

[3]

(b)

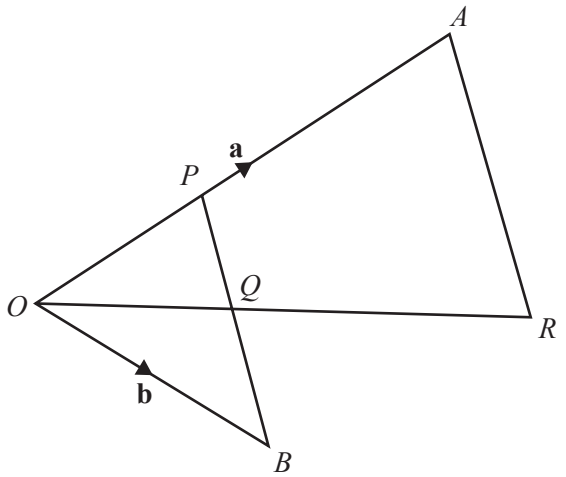

NOT TO SCALE

O, A and B are points with $\overrightarrow{OA} = \mathbf{a}$ and $\overrightarrow{OB} = \mathbf{b}$.

P is the point on OA such that $OP = \frac{1}{3}OA$.

O, Q and R lie on a straight line and Q is the midpoint of PB.

(i) Find $\overrightarrow{PB}$ in terms of **a** and **b**.

$\overrightarrow{PB} =$ ..... [1]

(ii) Find $\overrightarrow{OQ}$ in terms of **a** and **b**.
Give your answer in its simplest form.

$\overrightarrow{OQ}$ = ... [2]

(iii) $QR = 2OQ$.

Show that AR is parallel to PB.

[3]

Question 11 is printed on the next page.

11 $\mathrm{f}(x) = 3(x-2)$ $\mathrm{g}(x) = \frac{7x}{4} - 1$

(a) Find g(2).

..... [1]

(b) Find $\mathrm{g}^{-1}(x)$.

$\mathrm{g}^{-1}(x) =$ ..... [2]

(c) Given that $\mathrm{f}(t) = 6$, find t.

$t =$ ..... [2]

(d) $\mathrm{f}\left(\frac{7x}{4} - 1\right) = px + q$

Find p and q.

$p =$ ..... $q =$ ..... [3]

Permission to reproduce items where third-party owned material protected by copyright is included has been sought and cleared where possible. Every reasonable effort has been made by the publisher (UCLES) to trace copyright holders, but if any items requiring clearance have unwittingly been included, the publisher will be pleased to make amends at the earliest possible opportunity.

To avoid the issue of disclosure of answer-related information to candidates, all copyright acknowledgements are reproduced online in the Cambridge Assessment International Education Copyright Acknowledgements Booklet. This is produced for each series of examinations and is freely available to download at www.cambridgeinternational.org after the live examination series.

Cambridge Assessment International Education is part of the Cambridge Assessment Group. Cambridge Assessment is the brand name of the University of Cambridge Local Examinations Syndicate (UCLES), which itself is a department of the University of Cambridge.

© UCLES 2019