Cambridge Assessment International Education

Cambridge International AS & A Level

CANDIDATE NAME	

CENTRE NUMBER						CANDIDATE NUMBER				

1974060307

CHEMISTRY **9701/52**

Paper 5 Planning, Analysis and Evaluation **October/November 2021**

1 hour 15 minutes

You must answer on the question paper.

No additional materials are needed.

INSTRUCTIONS

- Answer **all** questions.
- Use a black or dark blue pen. You may use an HB pencil for any diagrams or graphs.
- Write your name, centre number and candidate number in the boxes at the top of the page.
- Write your answer to each question in the space provided.
- Do **not** use an erasable pen or correction fluid.
- Do **not** write on any bar codes.
- You may use a calculator.
- You should show all your working, use appropriate units and use an appropriate number of significant figures.

INFORMATION

- The total mark for this paper is 30.
- The number of marks for each question or part question is shown in brackets [ ].

This document has **12** pages. Any blank pages are indicated.

© UCLES 2021

1 It is possible to measure the enthalpy change of combustion, ΔH_c, of ethanol, C_2H_5OH, using the following apparatus.

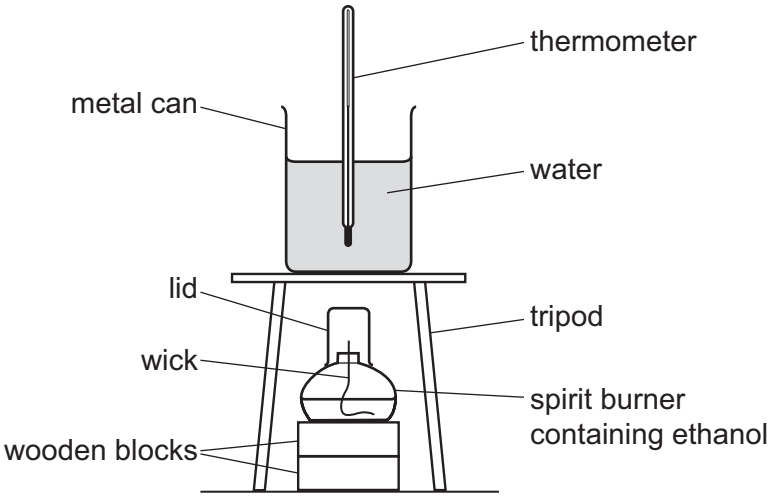

A student carries out an experiment to determine the value for ΔH_c of ethanol using the following instructions:

- Weigh the spirit burner with ethanol and lid, record the starting mass to two decimal places.
- Measure 100.00 cm^3 of water and place it into the metal can.
- Place a thermometer, with 0.1 °C graduations, into the water and stir it, wait for 2 minutes.
- Record the temperature of the water.
- Light the wick and allow the flame to heat the water.
- Continue to stir the water using the thermometer.
- After the temperature has risen by approximately 20 °C place the lid on the flame to extinguish it.
- Record the maximum temperature of the water.
- Weigh the spirit burner and record the final mass.

The student obtained the following results.

initial temperature of water / °C	maximum temperature of water / °C	change in temperature of water, ΔT / °C	initial mass of spirit burner / g	final mass of spirit burner / g	mass of ethanol burned / g
18.1	38.2		153.29	152.76	

(a) Complete the table. Record your answers to the correct number of decimal places. [1]

(b) Calculate the number of moles of ethanol burned. Give your answer to **three** significant figures.

[A_r: C, 12.0; H, 1.0; O, 16.0]

moles of ethanol = ... [1]

(c) Use the formula $q = mc\Delta T$ to determine the energy change, q, that took place during the experiment. Use q and your answer to **(b)** to calculate the enthalpy change of combustion of ethanol, ΔH_c, in $kJ\,mol^{-1}$.

Include a sign in your answer.

$1.00\,cm^3$ of water has a mass of $1.00\,g$
$c = 4.18\,J\,g^{-1}\,K^{-1}$

ΔH_c = ... $kJ\,mol^{-1}$ [2]

(d) Calculate the percentage error of the temperature change recorded in the table in **(a)**.

Show your working.

percentage error = ... [1]

(e) State the effect, if any at all, on the accuracy of the experiment if the spirit burner was allowed to burn for longer. Explain your answer.

.....

.....

.....

..... [1]

(f) The flame was extinguished, but the lid of the spirit burner was not replaced immediately.

Predict how this would affect the value of ΔH_c. Explain your answer.

.....

.....

.....

..... [2]

(g) The value for ΔH_c of ethanol under standard conditions is –1367 kJ mol^{-1}.

(i) Other than the reaction not being carried out under standard conditions, suggest **two** reasons why the value the student obtained in **(c)** is different from the actual value.

1 .....

.....

2 .....

.....
[2]

(ii) It is possible to calculate ΔH_c of ethanol using average bond enthalpies and the chemical equation for the reaction.

$$C_2H_5OH(l) + 3O_2(g) \rightarrow 2CO_2(g) + 3H_2O(l)$$

Using average bond enthalpies, ΔH_c of ethanol is –1297 kJ mol^{-1}.

Explain why this value is different from the actual value for ΔH_c of ethanol under standard conditions.

.....

..... [1]

[Total: 11]

2 Halogenoalkanes undergo hydrolysis with aqueous sodium hydroxide to form alcohols.

e.g. $CH_3CH_2CH_2CH_2Br(l) + NaOH(aq) \rightarrow CH_3CH_2CH_2CH_2OH(l) + NaBr(aq)$

A student carried out an experiment to compare the rate at which three halogenoalkanes, 1-chlorobutane, $CH_3CH_2CH_2CH_2Cl$, 1-bromobutane, $CH_3CH_2CH_2CH_2Br$, and 1-iodobutane, $CH_3CH_2CH_2CH_2I$, undergo hydrolysis. The method used was as follows:

- Place a 5 cm^3 sample of each halogenoalkane into separate test-tubes.
- Add 1 cm^3 of organic solvent to each test-tube.
- Add 2 cm^3 aqueous sodium hydroxide to each test-tube.
- Add 3 drops of acid–base indicator to the mixture.
- Heat the test-tubes in a thermostatically controlled, electrically heated water bath.
- Record the time taken for the indicator to change colour.

(a) Give **two** reasons why the experiment was carried out using an electrically heated water bath.

1 .....

.....

2 .....

.....
[2]

(b) Sodium hydroxide is corrosive.

Apart from wearing safety glasses and a lab coat, state **one** safety precaution which must be taken when handling sodium hydroxide.

..... [1]

(c) Suggest why an organic solvent must be used in this experiment.

.....

..... [1]

(d) Why is acid–base indicator added to the reaction mixture?

.....

..... [1]

(e) The student obtained the following results.

halogenoalkane	time taken for indicator to change colour / s	$\frac{1}{\text{time}}$ / s^{-1}
1-chlorobutane	417	
1-bromobutane	238	
1-iodobutane	135	

(i) Complete the table to show $\frac{1}{\text{time}}$. [1]

(ii) $\frac{1}{\text{time}}$ can be used to represent rate of reaction.

Suggest what the $\frac{1}{\text{time}}$ values tell you about the trend in carbon-halogen bond enthalpies.

.....

..... [1]

(f) Identify **one** additional variable that must be controlled in this experiment.

..... [1]

Question 2 continues on the next page.

(g) The student decided to investigate the order of reaction with respect to aqueous sodium hydroxide.

$$CH_3CH_2CH_2CH_2Cl(l) + NaOH(aq) \rightarrow CH_3CH_2CH_2CH_2OH(l) + NaCl(aq)$$

step 1 An excess of 1-chlorobutane was mixed with 1.00 mol dm^{-3} NaOH(aq), at room temperature.
step 2 A stop-clock was immediately started.
step 3 At intervals of 60 seconds the student took 10.00 cm^3 samples from the reaction mixture, for 11 minutes.
step 4 Each 10.00 cm^3 sample was immediately added to ice in a conical flask.
step 5 The concentration of NaOH(aq) in each sample was determined by titration.

The results are shown.

time / s	concentration of NaOH(aq) / mol dm^{-3}
0	1.00
60	0.75
120	0.62
180	0.51
240	0.39
300	0.31
360	0.24
420	0.19
480	0.12
540	0.13
600	0.11
660	0.09

(i) Plot a graph of concentration of NaOH(aq) (*y*-axis) against time (*x*-axis).

Use a cross (×) to plot each data point. Draw a curved line of best fit.

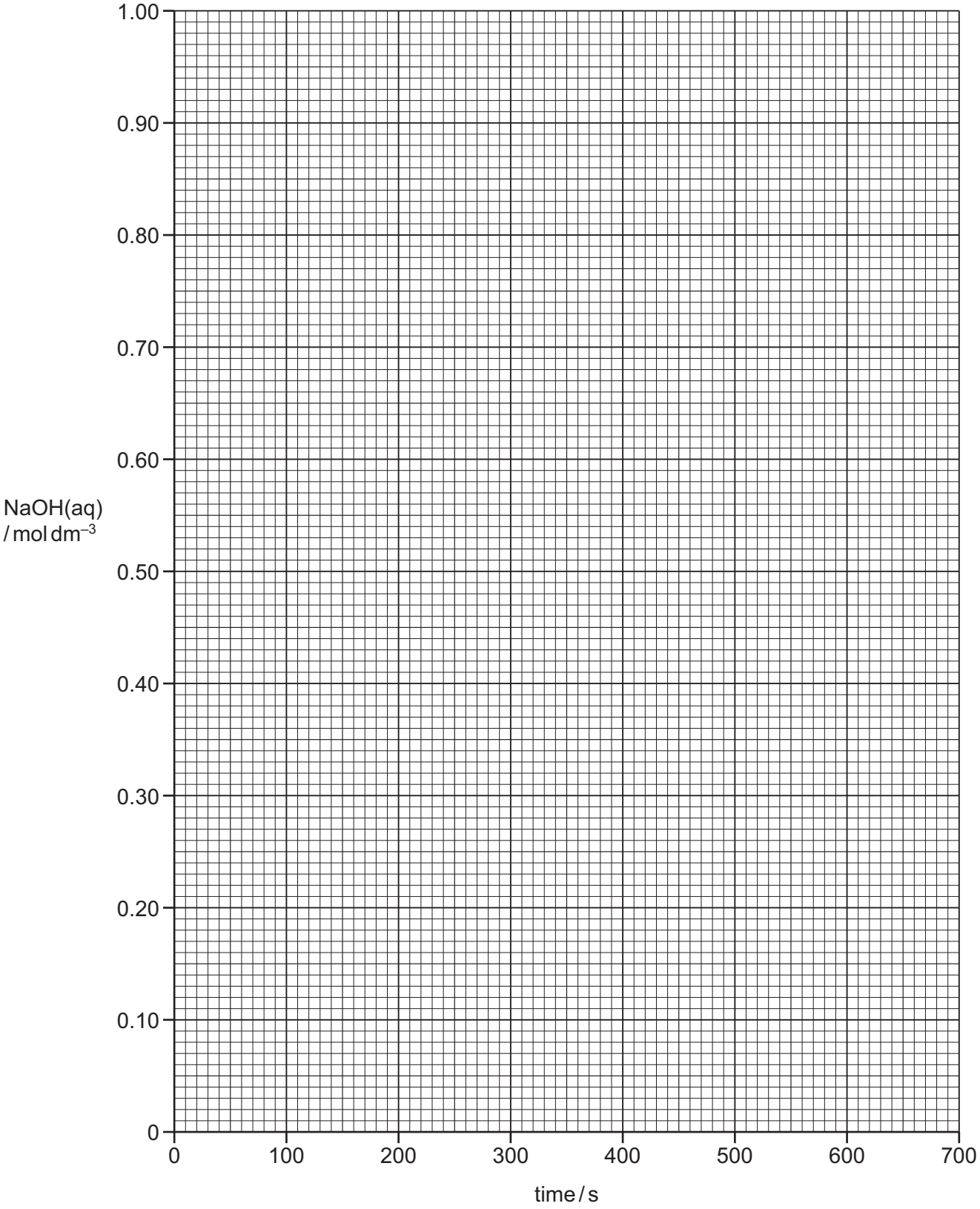

[2]

(ii) Circle the point which you consider to be most anomalous. [1]

(iii) Suggest **one** reason for this anomalous point.

.....

..... [1]

(iv) Draw construction lines on the graph to calculate two consecutive half-lives for this reaction.

first half-life = ... s

second half-life = ... s
[2]

(v) State whether you consider this to be a first-order reaction with respect to NaOH.
Explain your answer.

.....

..... [1]

(h) The total volume of the reaction mixture at the start of the experiment was 250 cm^3.

(i) Name a piece of apparatus that could be used to remove 10.00 cm^3 samples from the reaction mixture.

..... [1]

(ii) Suggest why the student did not remove 25.00 cm^3 samples for titration from the reaction mixture.

.....

..... [1]

(iii) Explain why each sample is added to ice in step 4.

.....

..... [1]

(i) Another method for following the rate of a reaction is to measure changes in electrical conductivity.

Explain why this would not be a suitable method for following this reaction.

.....

..... [1]

[Total: 19]

BLANK PAGE

BLANK PAGE

Permission to reproduce items where third-party owned material protected by copyright is included has been sought and cleared where possible. Every reasonable effort has been made by the publisher (UCLES) to trace copyright holders, but if any items requiring clearance have unwittingly been included, the publisher will be pleased to make amends at the earliest possible opportunity.

To avoid the issue of disclosure of answer-related information to candidates, all copyright acknowledgements are reproduced online in the Cambridge Assessment International Education Copyright Acknowledgements Booklet. This is produced for each series of examinations and is freely available to download at www.cambridgeinternational.org after the live examination series.

Cambridge Assessment International Education is part of the Cambridge Assessment Group. Cambridge Assessment is the brand name of the University of Cambridge Local Examinations Syndicate (UCLES), which itself is a department of the University of Cambridge.