Cambridge O Level

Cambridge Assessment International Education
Cambridge Ordinary Level

CANDIDATE NAME	

CENTRE NUMBER						CANDIDATE NUMBER				

0734499281

MATHEMATICS (SYLLABUS D) **4024/12**

Paper 1 **October/November 2019**

2 hours

Candidates answer on the Question Paper.

Additional Materials: Geometrical instruments

READ THESE INSTRUCTIONS FIRST

Write your centre number, candidate number and name on all the work you hand in.
Write in dark blue or black pen.
You may use an HB pencil for any diagrams or graphs.
Do not use staples, paper clips, glue or correction fluid.
DO **NOT** WRITE IN ANY BARCODES.

Answer **all** questions.

If working is needed for any question it must be shown in the space below that question.
Omission of essential working will result in loss of marks.

ELECTRONIC CALCULATORS MUST NOT BE USED IN THIS PAPER.

The number of marks is given in brackets [ ] at the end of each question or part question.
The total of the marks for this paper is 80.

This document consists of **20** printed pages.

DC (LK/TP) 172991/3
© UCLES 2019

Cambridge Assessment International Education

[Turn over

ELECTRONIC CALCULATORS MUST NOT BE USED IN THIS PAPER

1 **(a)** Evaluate $1\frac{1}{8} - \frac{1}{4}$.

..... [1]

(b) Evaluate $\frac{5}{9} \div \frac{2}{3}$.

..... [1]

2 Write these values in order, starting with the smallest.

$\frac{7}{200}$ 4% $\frac{3}{50}$ 0.03 $\frac{1}{20}$

..... , ... , ... , ... , ... [2]
smallest

© UCLES 2019

3

$$\sqrt{35} \qquad \sqrt{36} \qquad 36 \qquad \frac{36}{37} \qquad 37 \qquad \frac{37}{36} \qquad 3.7$$

From this list of numbers, write down

(a) a prime number,

..... [1]

(b) a square number,

..... [1]

(c) an irrational number.

..... [1]

4 Solve the equation $6 + 8x = 7 - 2x$.

$x =$ ..... [2]

5 Factorise.

(a) $49 - 9t^2$

..... [1]

(b) $15xy + 5x - 6y - 2$

..... [2]

6 **(a)** A movie lasts for 1 hour 48 minutes and finishes at 10.15 pm.

Find the time it starts.

..... [1]

(b) The size of a television screen is given as 95 cm, correct to the nearest 5 cm.

Write down the upper bound of the size of the television screen.

..... cm [1]

7 **(a)** The diagram shows a circle, its centre and two chords of equal length.
The diagram has one line of symmetry.

Draw this line of symmetry.

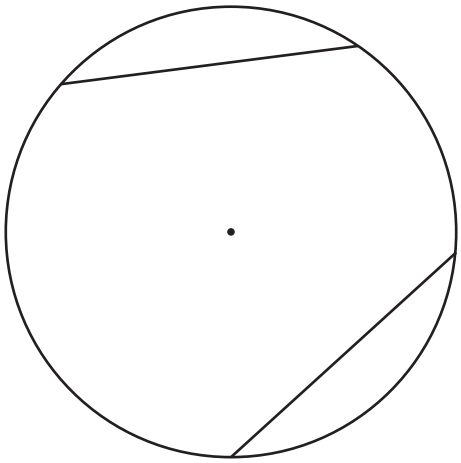

[1]

(b) In the diagram below, two small triangles are shaded.

Shade **one** more small triangle to give a diagram that has rotational symmetry of order 3.

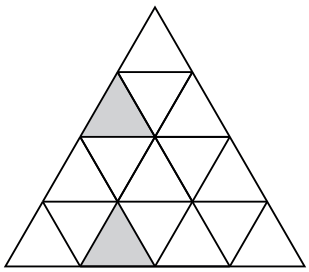

[1]

8 By writing each number correct to 1 significant figure, estimate the value of

$$\frac{39.864 \times \sqrt{8.987}}{0.6013}.$$

..... [2]

9 A map has a scale of 5 cm to 2 km.

(a) The actual distance between two masts is 14 km.

Calculate the distance, in cm, on the map between the two masts.

..... cm [1]

(b) On the map, the surface area of a lake is 50 cm^2.

Calculate the surface area, in km^2, of the actual lake.

..... km^2 [2]

(c) Write the scale 5 cm to 2 km in the form 1 : n.

1 : ..... [1]

10 y is inversely proportional to x.
When $x = 2$, $y = t$.

Find an expression for y, in terms of t, when $x = 3$.

$y =$ ..... [2]

11 **(a)** Express 4500×1000^2 in standard form.

..... [1]

(b) Giving your answer in standard form, evaluate $\dfrac{2.4 \times 10^{-8}}{4 \times 10^{-3}}$.

..... [2]

12 A polygon has 12 sides.

Calculate the sum of the interior angles of this polygon.

..... [2]

13 Simplify.

(a) $\left(2x^2\right)^0$

..... [1]

(b) $\left(3x^3\right)^2$

..... [1]

(c) $\left(\frac{8}{x^3}\right)^{-\frac{1}{3}}$

..... [2]

14 The temperatures, in °C, of 120 people were measured.
The results are summarised in the cumulative frequency diagram.

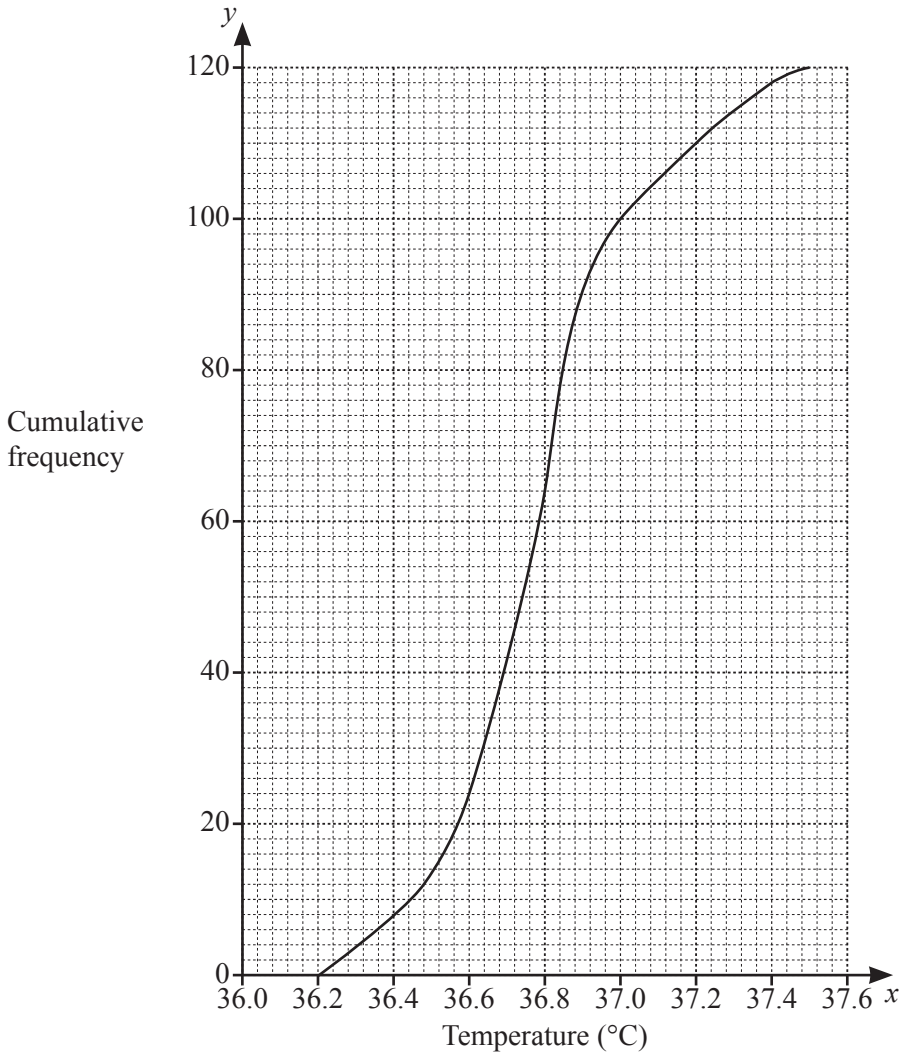

Use the diagram to find an estimate of

(a) the 20th percentile,

..... °C [2]

(b) the number of people with a temperature between 36.8 °C and 37.0 °C.

..... [2]

15 The time taken by each member of a group of students to solve a problem was recorded. Some of the results are summarised in the table and illustrated in the histogram.

Time (t minutes)	$1 < t \leqslant 2$	$2 < t \leqslant 3$	$3 < t \leqslant 4$	$4 < t \leqslant 6$	$6 < t \leqslant 8$
Frequency	6	10	12	p	4

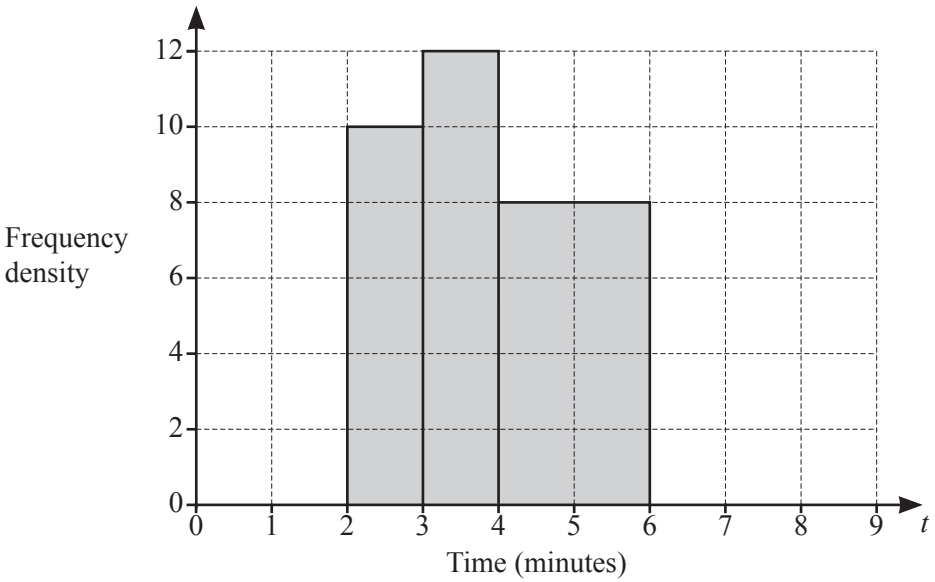

(a) Use the histogram to find the value of p.

$p =$ ..... [1]

(b) Complete the histogram. [2]

16

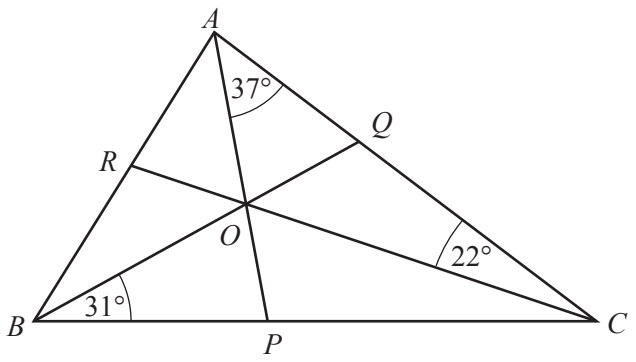

NOT TO SCALE

In the diagram, AP, BQ and CR are the bisectors of the angles of triangle ABC.
The bisectors intersect at O.

(a) $O\hat{B}P = 31°$, $O\hat{C}Q = 22°$ and $O\hat{A}Q = 37°$.

Calculate $P\hat{O}C$.

$P\hat{O}C =$ ..... [1]

(b) In the diagram, shade the region containing the points which are

- nearer to AB than AC

and

- nearer to CA than CB.

[1]

17 A bag contains two white beads and one black bead only.
Two beads are taken, at random, without replacement from the bag.

(a) Complete the tree diagram.

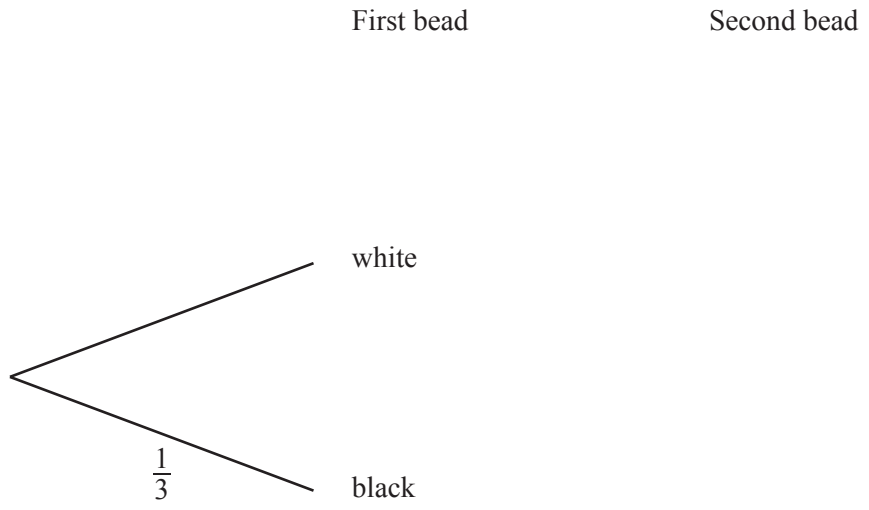

[2]

(b) Write down the probability that two black beads are taken.

..... [1]

18 The vertices of a triangle are A (7, 0), B (−1, 6) and C (−1, −4).

(a) Show that $AB = BC$.

[3]

(b) Find the area of triangle ABC.

..... unit^2 [2]

19

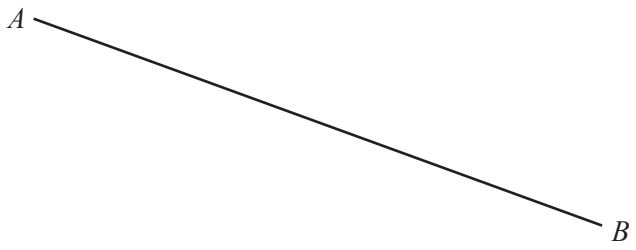

(a) C is the point **above** AB, where $AC = 5$ cm and $BC = 7$ cm.

Using a pair of compasses and ruler only, construct triangle ABC.

[2]

(b) D is the point **below** AB, where $B\hat{A}D = 28°$ and $A\hat{B}D = 96°$.

Using a protractor and ruler, draw triangle ABD. [2]

20

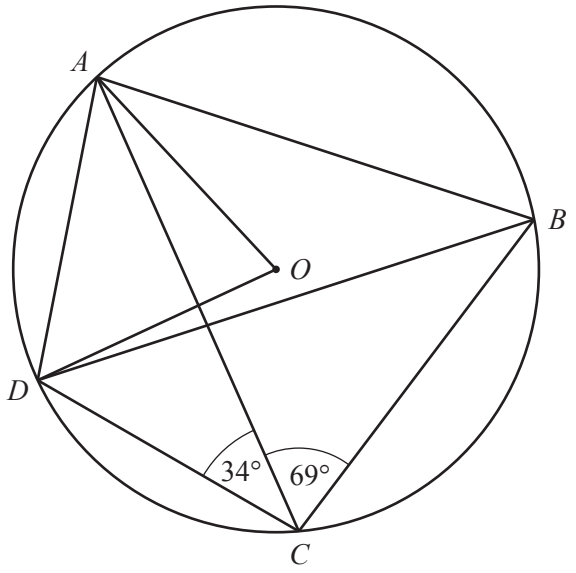

NOT TO SCALE

In the diagram, the points A, B, C, and D lie on the circle, centre O.

$A\hat{C}B = 69°$ and $D\hat{C}A = 34°$.

(a) Find $A\hat{B}D$.

$A\hat{B}D =$ ..... [1]

(b) Find $A\hat{O}D$.

$A\hat{O}D =$ ..... [1]

(c) Find $D\hat{A}B$.

$D\hat{A}B =$ ..... [1]

21

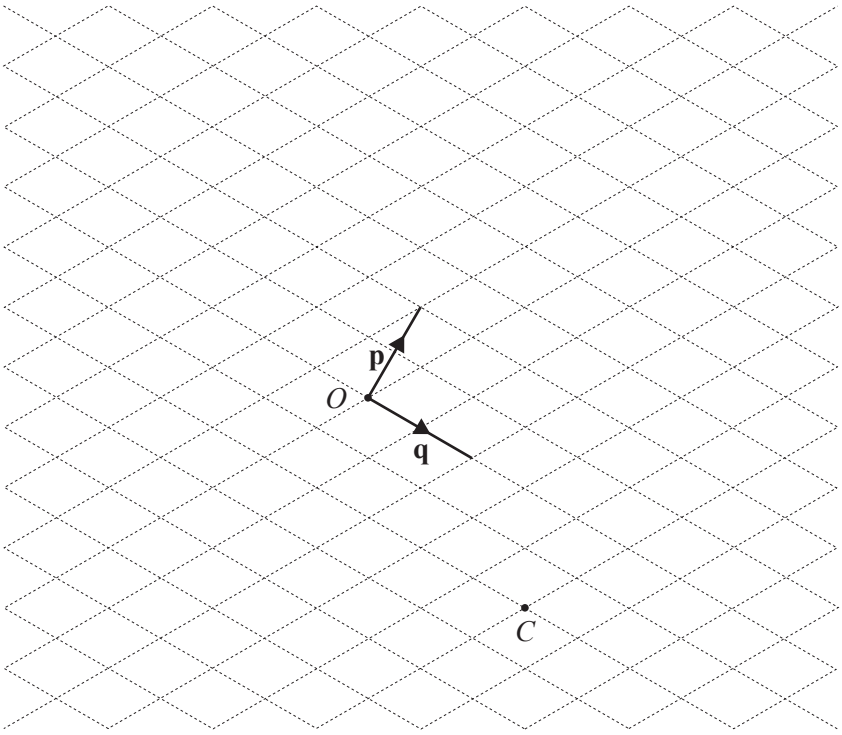

The diagram shows points O and C and the vectors $\mathbf{p}$ and $\mathbf{q}$.

(a) Given that $\overrightarrow{OA} = 2\mathbf{p}$, mark and label the point A on the diagram. [1]

(b) Given that $\overrightarrow{OB} = \mathbf{p} - 2\mathbf{q}$, mark and label the point B on the diagram. [1]

(c) Express $\overrightarrow{OC}$ in terms of $\mathbf{p}$ and $\mathbf{q}$.

..... [2]

22

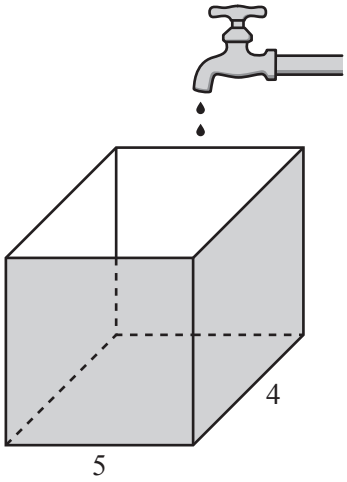

Water drips from a tap into a container which stands on a horizontal surface.
The container is a cuboid with base 5 cm by 4 cm.

The volume of **each** drop of water is $0.08\,cm^3$.

Calculate the change in water level caused by 400 drops.

..... cm [3]

23

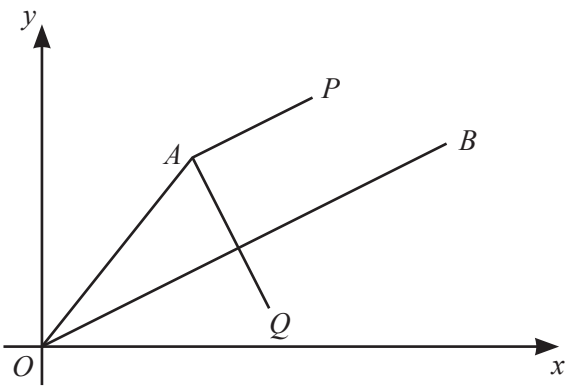

NOT TO SCALE

In the diagram, $\overrightarrow{OB} = \begin{pmatrix} 12 \\ 6 \end{pmatrix}$.

(a) Show that the gradient of $OB = \frac{1}{2}$.

[1]

(b) AP is parallel to OB and $\overrightarrow{AP} = \begin{pmatrix} p \\ 2 \end{pmatrix}$.

(i) Find the value of p.

$p =$ ..... [1]

(ii) Write down the value of $\frac{AP}{OB}$.

..... [1]

(c) AQ is perpendicular to OB.

(i) Write down the gradient of AQ.

..... [1]

(ii) Given that $\overrightarrow{AQ} = \begin{pmatrix} 3 \\ q \end{pmatrix}$, find the value of q.

$q =$ ..... [1]

24 **(a)** Express $3\begin{pmatrix} 1 & -1 \\ 0 & 2 \end{pmatrix} - 2\begin{pmatrix} -1 & 1 \\ 2 & 1 \end{pmatrix}$ as a single matrix.

$\begin{pmatrix} \quad & \quad \\ \quad & \quad \end{pmatrix}$ [2]

(b) Find the inverse of $\begin{pmatrix} \frac{1}{2} & 1 \\ 0 & 1 \end{pmatrix}$.

$\begin{pmatrix} \quad & \quad \\ \quad & \quad \end{pmatrix}$ [2]

(c) Find the matrix **X** such that $\mathbf{X}(3 \quad 2) = \begin{pmatrix} 6 & 4 \\ -3 & -2 \end{pmatrix}$.

[2]

Question 25 is printed on the next page

25 The diagram is the speed–time graph representing part of a train's journey.

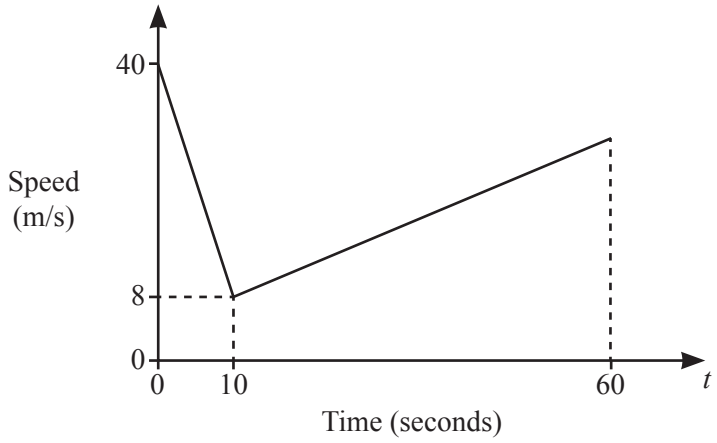

NOT TO SCALE

The train slows down uniformly from a speed of 40 m/s to a speed of 8 m/s in a time of 10 seconds. It then accelerates uniformly during the next 50 seconds.

(a) Find the deceleration between $t = 0$ and $t = 10$.

..... m/s^2 [1]

(b) Find the distance travelled from $t = 0$ to $t = 10$.

..... m [2]

(c) Between $t = 10$ and $t = 60$, the acceleration is $0.4\,m/s^2$.

Calculate the speed when $t = 60$.

..... m/s [2]

Permission to reproduce items where third-party owned material protected by copyright is included has been sought and cleared where possible. Every reasonable effort has been made by the publisher (UCLES) to trace copyright holders, but if any items requiring clearance have unwittingly been included, the publisher will be pleased to make amends at the earliest possible opportunity.

To avoid the issue of disclosure of answer-related information to candidates, all copyright acknowledgements are reproduced online in the Cambridge Assessment International Education Copyright Acknowledgements Booklet. This is produced for each series of examinations and is freely available to download at www.cambridgeinternational.org after the live examination series.

Cambridge Assessment International Education is part of the Cambridge Assessment Group. Cambridge Assessment is the brand name of the University of Cambridge Local Examinations Syndicate (UCLES), which itself is a department of the University of Cambridge.

© UCLES 2019