Cambridge Assessment International Education

Cambridge O Level

CANDIDATE NAME	

CENTRE NUMBER						CANDIDATE NUMBER				

0213186666

MATHEMATICS (SYLLABUS D) **4024/21**

Paper 2 **October/November 2020**

2 hours 30 minutes

You must answer on the question paper.

You will need: Geometrical instruments

INSTRUCTIONS

- Answer **all** questions.
- Use a black or dark blue pen. You may use an HB pencil for any diagrams or graphs.
- Write your name, centre number and candidate number in the boxes at the top of the page.
- Write your answer to each question in the space provided.
- Do **not** use an erasable pen or correction fluid.
- Do **not** write on any bar codes.
- You should use a calculator where appropriate.
- You may use tracing paper.
- You must show all necessary working clearly.
- Give non-exact numerical answers correct to 3 significant figures, or 1 decimal place for angles in degrees, unless a different level of accuracy is specified in the question.
- For π, use either your calculator value or 3.142.

INFORMATION

- The total mark for this paper is 100.
- The number of marks for each question or part question is shown in brackets [ ].

This document has **20** pages. Blank pages are indicated.

DC (RW/FC) 188657/2
© UCLES 2020

1 **(a)** Here is some information about a holiday.

7-night holiday $340 per person 8% discount if you book before 31 March

On 15 February, Naseem books this holiday for 2 people.

Calculate the total cost of his holiday.

$ ..... [2]

(b) Naseem hires a car for his holiday.
The total cost is $241.50 .
This cost includes 15% tax.

Calculate the cost of hiring the car excluding tax.

$ ..... [2]

(c) Naseem drives a total of 800 km on holiday.
He uses a total of 29.6 litres of fuel.

Calculate the average rate of fuel used in litres per 100 km.

..... litres per 100 km [2]

© UCLES 2020

(d) Naseem changes \$450 to euros (€) for his holiday.
The exchange rate between dollars and euros is \$1 = €0.82 .
On holiday, he spends €297.

Naseem changes the remaining money back to dollars when he returns home.
The exchange rate is now \$1 = €0.80 .

Work out how many dollars he receives.

\$ ..... [3]

2 **(a)** The cumulative frequency diagram shows the masses, in grams, of 60 potatoes of variety A.

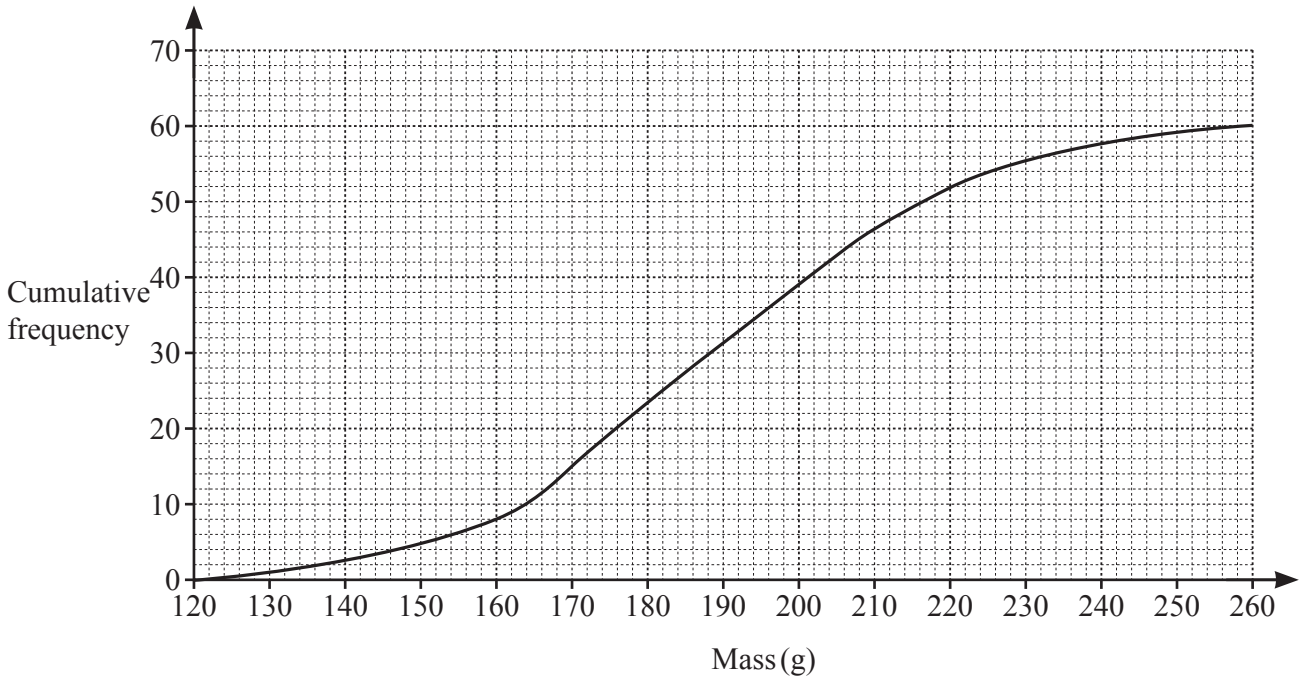

(i) Use the diagram to estimate

(a) the median,

..... g [1]

(b) the interquartile range.

..... g [2]

(ii) Potatoes with a mass greater than 220 g are sold as baking potatoes.

Find the percentage of the potatoes that are sold as baking potatoes.

..... % [3]

(iii) The masses of 60 potatoes of variety B are also measured.
For variety B, the median is 175 g and the interquartile range is 30 g.

Kali wants to buy potatoes that are more consistent in mass.

Should she choose variety A or variety B?
Explain how you decide.

Variety ..... because ..... [1]

© UCLES 2020

(b) The table shows the masses, m grams, of 120 potatoes of variety C.

Mass (m g)	$80 \leqslant m < 100$	$100 \leqslant m < 120$	$120 \leqslant m < 130$	$130 \leqslant m < 140$	$140 \leqslant m < 200$
Frequency	10	15	42	36	17

Calculate an estimate of the mean mass.

..... g [3]

(c) A bag of potatoes has a mass of 2.5 kg, correct to the nearest 100 g.
Bags of potatoes are packed into a box.
The mass of the box is 600 g, correct to the nearest 10 g.

Calculate the upper bound of the total mass, in kilograms, of a box containing 10 of these bags of potatoes.

..... kg [3]

3 **(a)** In triangle PQR, $PR = 7.5$ cm and $QR = 6$ cm.

(i) **Using a ruler and compasses only**, construct triangle PQR.
Line PQ has been drawn for you.

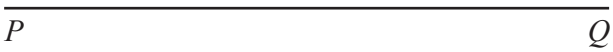

[2]

(ii) By taking suitable measurements from your triangle, calculate the area of triangle PQR.

..... cm^2 [2]

(b)

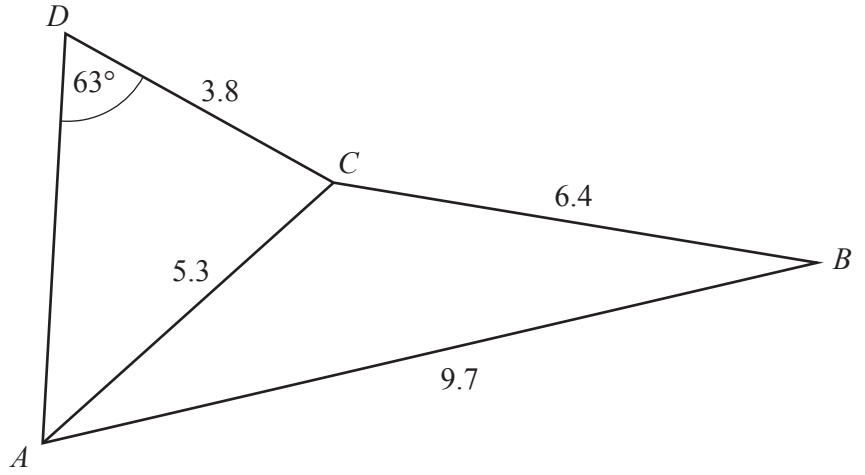

NOT TO SCALE

The diagram shows two triangles.
$AB = 9.7$ cm, $BC = 6.4$ cm, $CD = 3.8$ cm and $AC = 5.3$ cm.
$A\hat{D}C = 63°$.

(i) Calculate $D\hat{A}C$.

$D\hat{A}C =$ ..... [3]

(ii) Calculate $A\hat{B}C$.

$A\hat{B}C =$ ..... [3]

4 **(a)** Complete the table for $y = \frac{4}{5} \times 2^x$.

x	-3	-2	-1	0	1	2	3
y		0.2	0.4	0.8	1.6	3.2	6.4

[1]

(b) On the grid, draw the graph of $y = \frac{4}{5} \times 2^x$ for $-3 \leqslant x \leqslant 3$.

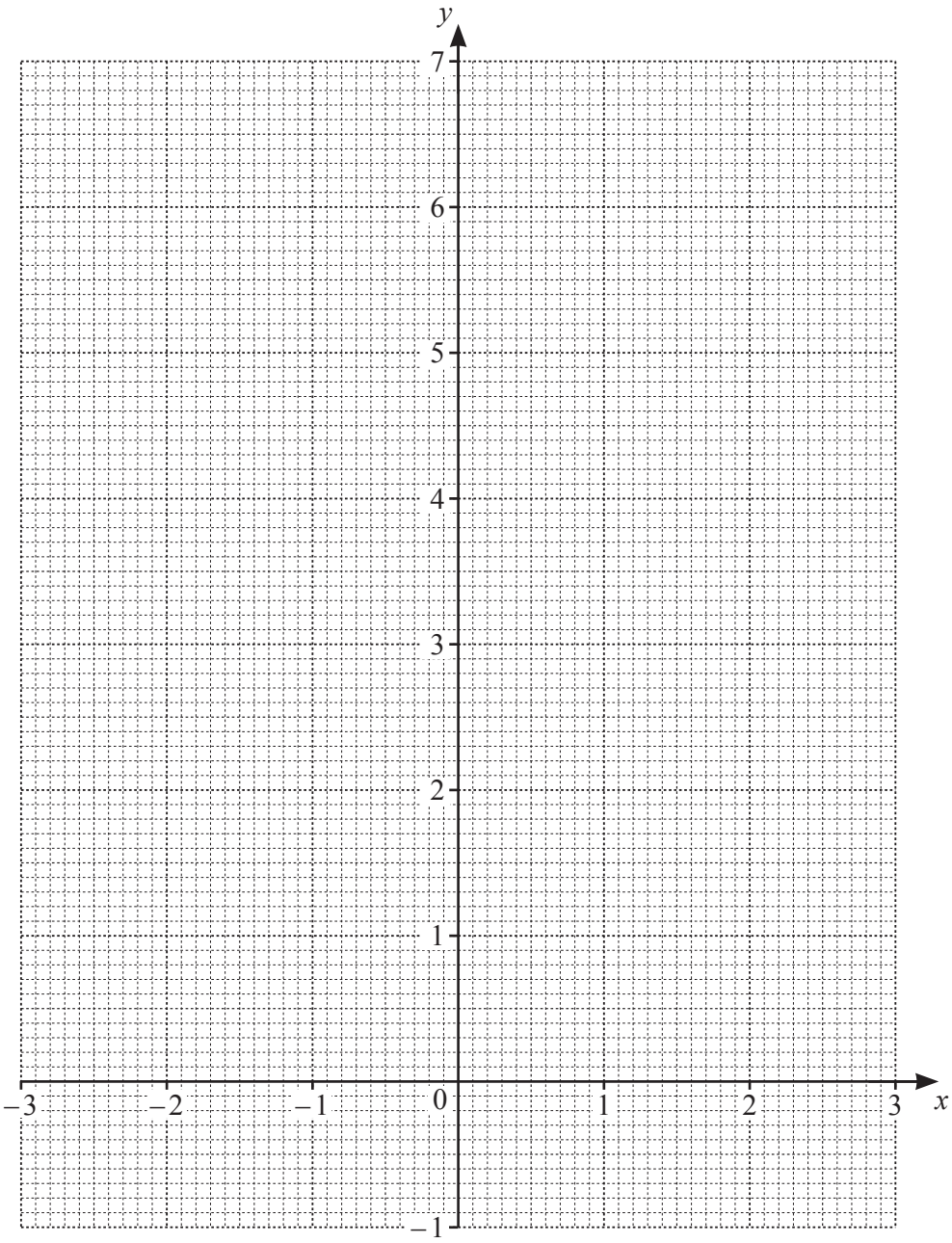

[3]

(c) By drawing a tangent, estimate the gradient of $y = \frac{4}{5} \times 2^x$ when $x = 2$.

..... [2]

(d) Use your graph to estimate the solution of the equation $4 \times 2^x = 5$.

$x =$ ..... [1]

5

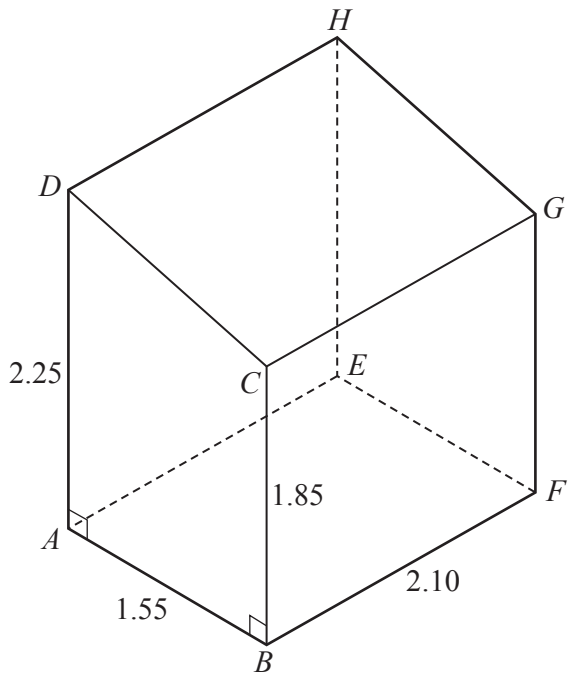

The diagram shows a garden shed positioned on horizontal ground.
It is in the shape of a prism with trapezium $ABCD$ as its cross-section.
The base of the shed, $ABFE$, is a rectangle.
$AB = 1.55\,\text{m}$, $AD = 2.25\,\text{m}$, $BC = 1.85\,\text{m}$ and $BF = 2.10\,\text{m}$.

(a) Calculate the volume of the shed.

..... m^3 [3]

(b) The roof of the shed, *CGHD*, is painted.
1 litre of paint covers 2 square metres.

Calculate the amount of paint used.

..... litres [4]

(c) Calculate the angle of elevation of *D* from *F*.

..... [4]

6 **(a)** Solve the inequality $6x - 7 > 5 - 2x$.

..... [2]

(b) Chen buys 4 notebooks and 3 pens for \$17.50 .
Liu buys 2 notebooks and 5 pens for \$14.

Form a pair of simultaneous equations and solve them to find the cost of a notebook and the cost of a pen.
Show your working.

Notebook \$ .....

Pen \$ ..... [4]

© UCLES 2020

(c) **(i)** Show that $\frac{x}{x+2} - \frac{3}{x-5} = 4$ can be rearranged to $3x^2 - 4x - 34 = 0$.

[3]

(ii) Solve the equation $3x^2 - 4x - 34 = 0$.
Show your working and give your answers correct to 2 decimal places.

$x =$ ..... or $x =$ ..... [3]

7 (a)

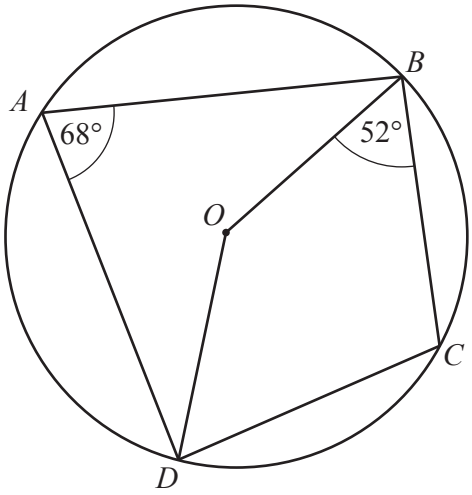

NOT TO SCALE

A, B, C and D are points on the circle, centre O.
$B\hat{A}D = 68°$ and $C\hat{B}O = 52°$.

Find $C\hat{D}O$.

$C\hat{D}O =$ ..... [3]

(b)

Solid A

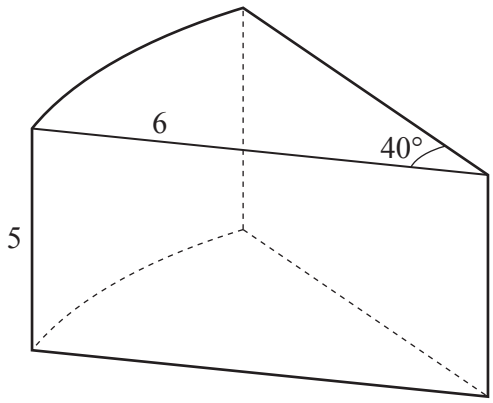

The cross-section of solid A is the sector of a circle of radius 6 cm and angle 40°.
The height of solid A is 5 cm.

(i) Calculate the total surface area of solid A.

..... cm^2 [4]

(ii) Solid B is mathematically similar to solid A.
The ratio volume of solid A : volume of solid B = 27 : 1.

Calculate the surface area of solid B.

..... cm^2 [2]

8 A bag contains 36 balls.
There are n red balls in the bag.
The rest of the balls are green.
Esther takes two balls from the bag, at random, without replacement.

(a) Complete the tree diagram.

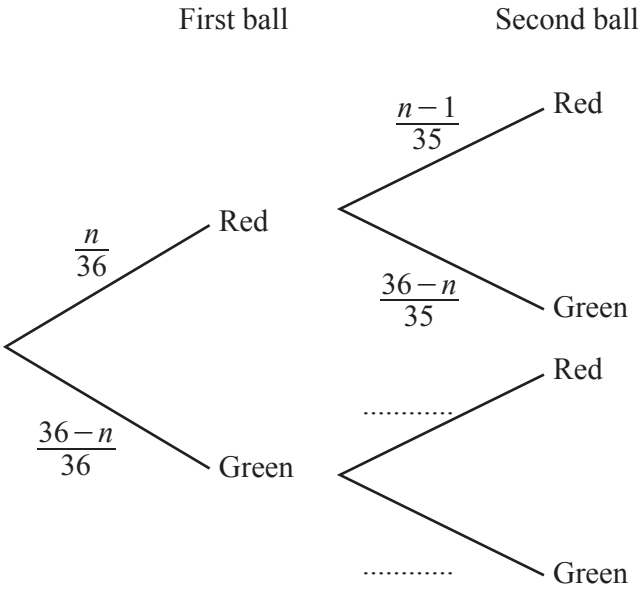

[2]

(b) Write an expression, in terms of n, for the probability that Esther's first ball is red and her second ball is green.

..... [1]

(c) The probability that Esther's first ball is red and her second ball is green is $\frac{1}{7}$.

Show that $n^2 - 36n + 180 = 0$.

[2]

(d) Solve the equation $n^2 - 36n + 180 = 0$.
Show your working.

$n =$ ..... or $n =$ ..... [2]

(e) There are more green balls than red balls in the bag.

Find the probability that Esther takes two green balls.
Give your answer as a fraction in its lowest terms.

..... [3]

9 **(a)** H is the point (5, 2) and J is the point $(-3, 6)$.

(i) Find $\overrightarrow{HJ}$.

$\overrightarrow{HJ} = \begin{pmatrix} \quad \\ \quad \end{pmatrix}$ [1]

(ii) Calculate the magnitude of $\overrightarrow{HJ}$.

..... [2]

(iii) M is the midpoint of HJ.

Find the position vector of M.

$\begin{pmatrix} \quad \\ \quad \end{pmatrix}$ [2]

(b)

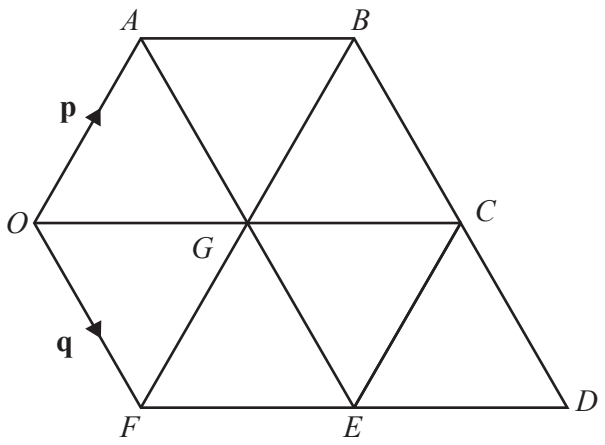

The diagram shows a shape made from seven identical equilateral triangles.
$\overrightarrow{OA} = \mathbf{p}$ and $\overrightarrow{OF} = \mathbf{q}$.

(i) Express, as simply as possible, in terms of **p** and/or **q**

(a) $\overrightarrow{FB}$,

$\overrightarrow{FB} =$ ..... [1]

(b) $\overrightarrow{FE}$.

$\overrightarrow{FE} =$ ..... [1]

(ii) X is a point on FB and $FX : XB = 3 : 1$.

Express $\overrightarrow{OX}$, as simply as possible, in terms of **p** and/or **q**.

$\overrightarrow{OX} =$ ..... [2]

(iii) Y is a point on BD.
Quadrilateral $OXYF$ is a trapezium.

Express $\overrightarrow{XY}$, as simply as possible, in terms of **p** and/or **q**.

$\overrightarrow{XY} =$ ..... [3]

Question 10 is printed on the next page.

10 $\mathrm{f}(x) = \dfrac{3-2x}{5}$ $\mathrm{g}(x) = \dfrac{x-7}{4}$

(a) Find $\mathrm{f}(-4)$.

..... [1]

(b) Find $\mathrm{f}^{-1}(x)$.

$\mathrm{f}^{-1}(x) =$ ..... [3]

(c) $\mathrm{g}(p) = \mathrm{f}(p+1)$

Find the value of p.

$p =$ ..... [3]

Permission to reproduce items where third-party owned material protected by copyright is included has been sought and cleared where possible. Every reasonable effort has been made by the publisher (UCLES) to trace copyright holders, but if any items requiring clearance have unwittingly been included, the publisher will be pleased to make amends at the earliest possible opportunity.

To avoid the issue of disclosure of answer-related information to candidates, all copyright acknowledgements are reproduced online in the Cambridge Assessment International Education Copyright Acknowledgements Booklet. This is produced for each series of examinations and is freely available to download at www.cambridgeinternational.org after the live examination series.

Cambridge Assessment International Education is part of the Cambridge Assessment Group. Cambridge Assessment is the brand name of the University of Cambridge Local Examinations Syndicate (UCLES), which itself is a department of the University of Cambridge.

© UCLES 2020