Cambridge Assessment International Education

Cambridge O Level

CANDIDATE NAME	

CENTRE NUMBER						CANDIDATE NUMBER				

6389811924

MATHEMATICS (SYLLABUS D) **4024/11**

Paper 1 **May/June 2021**

2 hours

You must answer on the question paper.

You will need: Geometrical instruments

INSTRUCTIONS

- Answer **all** questions.
- Use a black or dark blue pen. You may use an HB pencil for any diagrams or graphs.
- Write your name, centre number and candidate number in the boxes at the top of the page.
- Write your answer to each question in the space provided.
- Do **not** use an erasable pen or correction fluid.
- Do **not** write on any bar codes.
- Calculators must **not** be used in this paper.
- You may use tracing paper.
- You must show all necessary working clearly.

INFORMATION

- The total mark for this paper is 80.
- The number of marks for each question or part question is shown in brackets [ ].

This document has **16** pages.

DC (RW/SW) 205839/3
© UCLES 2021

ELECTRONIC CALCULATORS MUST NOT BE USED IN THIS PAPER

1 Work out.

(a) $74.6 \times 10 - 3.89 \times 100$

..... [1]

(b) $5 + 3 \times 2 - 1$

..... [1]

2 15 125 $\sqrt{8}$ 11 $\sqrt{25}$ 14 60

From the numbers above, write down

(a) a factor of 70,

..... [1]

(b) a cube number,

..... [1]

(c) an irrational number.

..... [1]

3 **(a)** Work out $\frac{3}{7} + \frac{2}{5}$.

..... [1]

(b) Find $\frac{2}{3}$ of $\frac{6}{11}$, giving your answer as a fraction in its simplest form.

..... [1]

4 **(a)** A record is kept of the water level in a harbour.
One morning, the level is 5 m. That afternoon, the level is -2 m.

Find the difference between the level in the morning and the level in the afternoon.

..... m [1]

(b) One day, the temperature at midday is 9 °C.
At midnight the temperature has dropped by 15.3 °C.

Find the temperature at midnight.

..... °C [1]

5

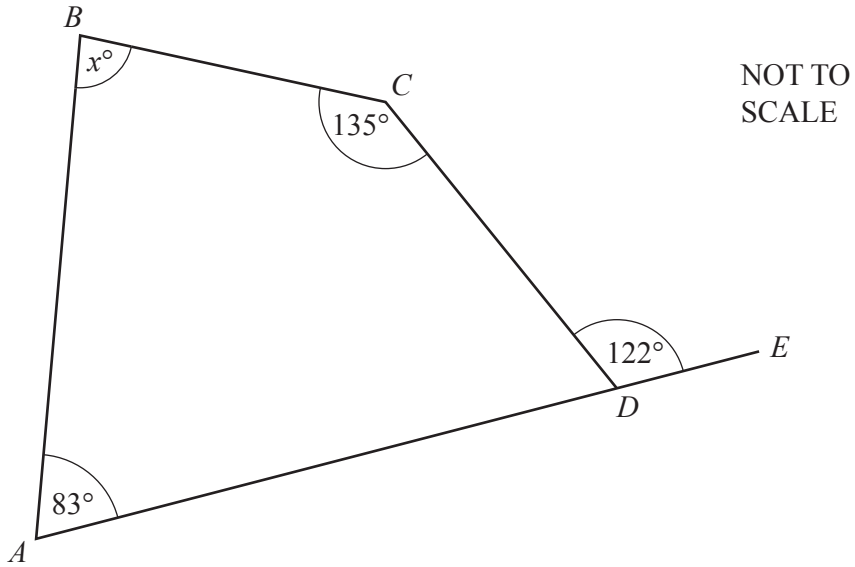

The diagram shows quadrilateral $ABCD$ with AD extended to E.
Angle $BCD = 135°$, angle $BAD = 83°$ and angle $CDE = 122°$.

Find the value of x.

$x =$ ..... [2]

6 **(a)** Write 308 as a product of its prime factors.

..... [2]

(b) Find the highest common factor (HCF) of 308 and 66.

..... [1]

7

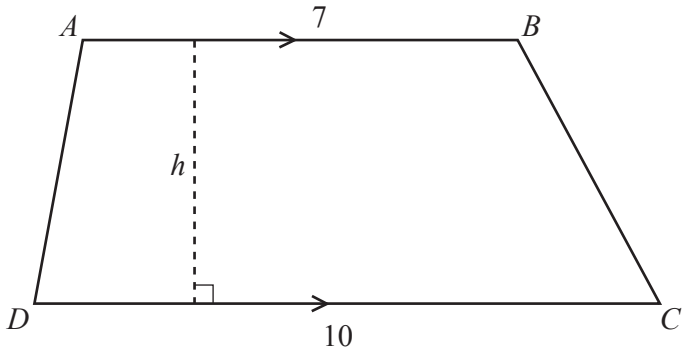

NOT TO SCALE

The diagram shows trapezium $ABCD$.
$AB = 7$ cm and $DC = 10$ cm.
The area of $ABCD$ is $85\,\text{cm}^2$.
The perpendicular height of the trapezium is h cm.

Find the value of h.

$h =$ ..... [2]

8 **(a)** Simplify $6x + 15 - 2x + 8$.

..... [1]

(b) Expand and simplify $(x - 5)^2$.

..... [2]

9 Insert the correct symbol $=$, $>$ or $<$ to make each statement correct.

(a) 0.6 kg ..... 60 g [1]

(b) 15 km ..... 15 000 m [1]

(c) 4 m^2 ..... 400 cm^2 [1]

10 By writing each number correct to one significant figure, estimate the value of

$$\frac{362.4 - 187.2}{52.3}.$$

..... [2]

11 **(a)** In a survey, 3 out of every 100 women were taller than 1.9 m.
One of these 100 women is picked at random.

Calculate the probability that she is **not** taller than 1.9 m.

..... [1]

(b) A new housing estate is being planned.
There are three possible plans: *A*, *B* and *C*.
A survey was carried out to see which plan people preferred.
The relative frequency table shows the results.

Plan	*A*	*B*	*C*
Relative frequency	0.3	0.5	0.2

52 people preferred plan *C*.

(i) Find how many people preferred plan *A*.

..... [2]

(ii) Calculate the total number of people surveyed.

..... [1]

12 Bernard bought a game in the USA for \$15.
Alice bought the same game in Zambia and paid the equivalent price in Zambian kwacha (ZK).

Exchange Rate

1ZK = \$0.075

Calculate the price that Alice paid.

..... ZK [2]

© UCLES 2021

13 Two numbers x and y are such that

- $x : y = 5 : 11$

and

- $x + y = 112$.

Find x and y.

$x =$ .....

$y =$ ..... [2]

14 **(a)** This is the term-to-term rule for a sequence.

Multiply by 2 and add 3

The first three terms in this sequence are 1, 5 and 13.

Write down the next term in this sequence.

..... [1]

(b) This is the term-to-term rule for a different sequence.

Square and subtract 5

The second and third terms in this sequence are -1 and -4.

(i) Write down the fourth term in this sequence.

..... [1]

(ii) Write down the two possible values for the first term in this sequence.

..... or ..... [2]

15

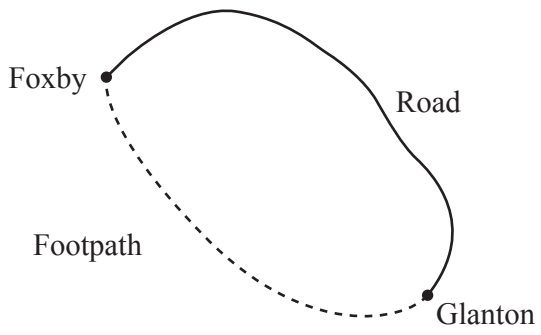

NOT TO SCALE

Two villages, Foxby and Glanton, are joined by a footpath and a road.

(a) Abdul walks along the footpath from Foxby to Glanton.
He walks for 2 hours 14 minutes and arrives at Glanton at 15 10.

Calculate the time Abdul left Foxby.

..... [1]

(b) The distance, by road, between Foxby and Glanton is 15 km.
A bus travels along the road between Foxby and Glanton.
The bus journey takes 12 minutes.

Calculate the average speed of the bus in kilometres per hour.

..... km/h [2]

(c) The bearing of Glanton from Foxby is 128°.

Calculate the bearing of Foxby from Glanton.

..... [1]

© UCLES 2021

16

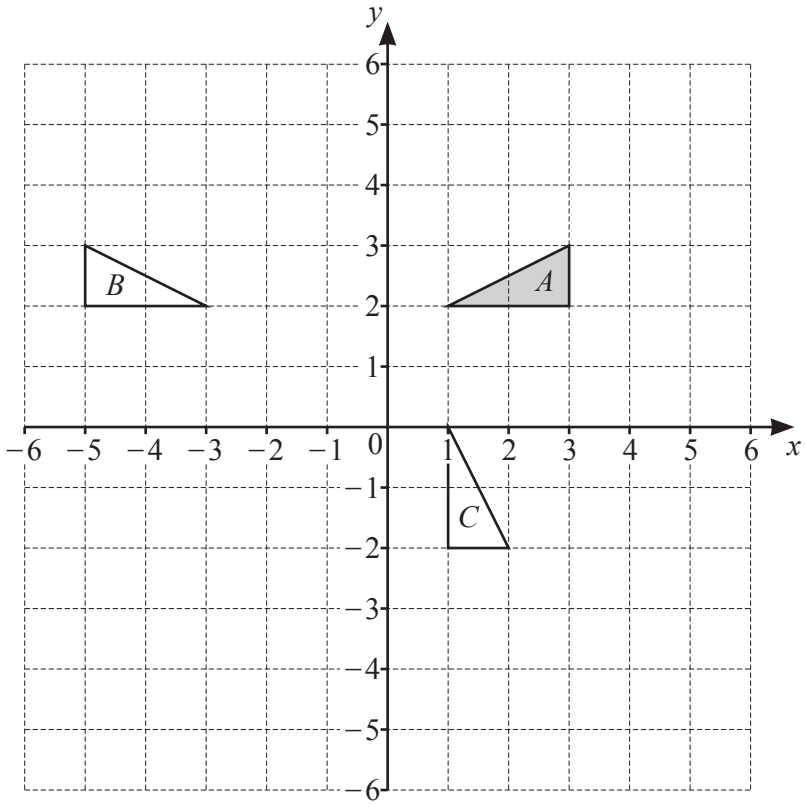

Triangles *A*, *B* and *C* are drawn on the grid.

(a) Describe fully the **single** transformation that maps triangle *A* onto triangle *B*.

.....

..... [2]

(b) Describe fully the **single** transformation that maps triangle *A* onto triangle *C*.

.....

..... [3]

(c) Triangle *D* is the image of triangle *A* after an enlargement, scale factor 2, with centre of enlargement (1, 2).

Draw triangle *D*. [2]

17

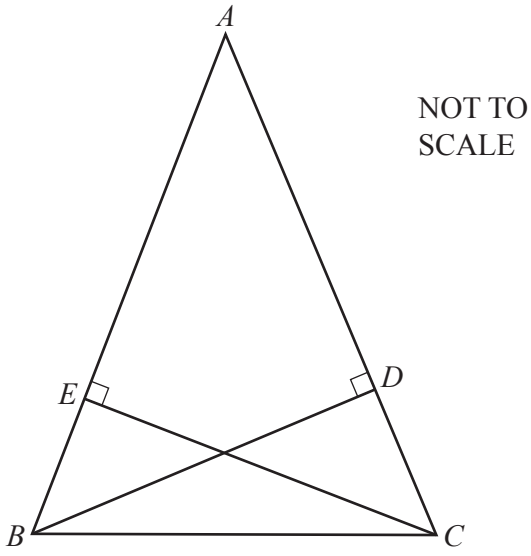

The diagram shows an isosceles triangle ABC where $AB = AC$.
D is a point on AC such that angle $ADB = 90°$.
E is a point on AB such that angle $AEC = 90°$.

Show that triangles ADB and AEC are congruent.
Give a reason for each statement you make.

.....

.....

.....

.....

..... [3]

18 Solve the simultaneous equations.
Show your working.

$$x + 6y = 0$$
$$3x - 2y = 10$$

$x =$ .....

$y =$ ..... [3]

19 y is proportional to $(x-1)^2$.

Given that $y = 18$ when $x = 4$, find y when $x = 6$.

$y =$ ..... [2]

20

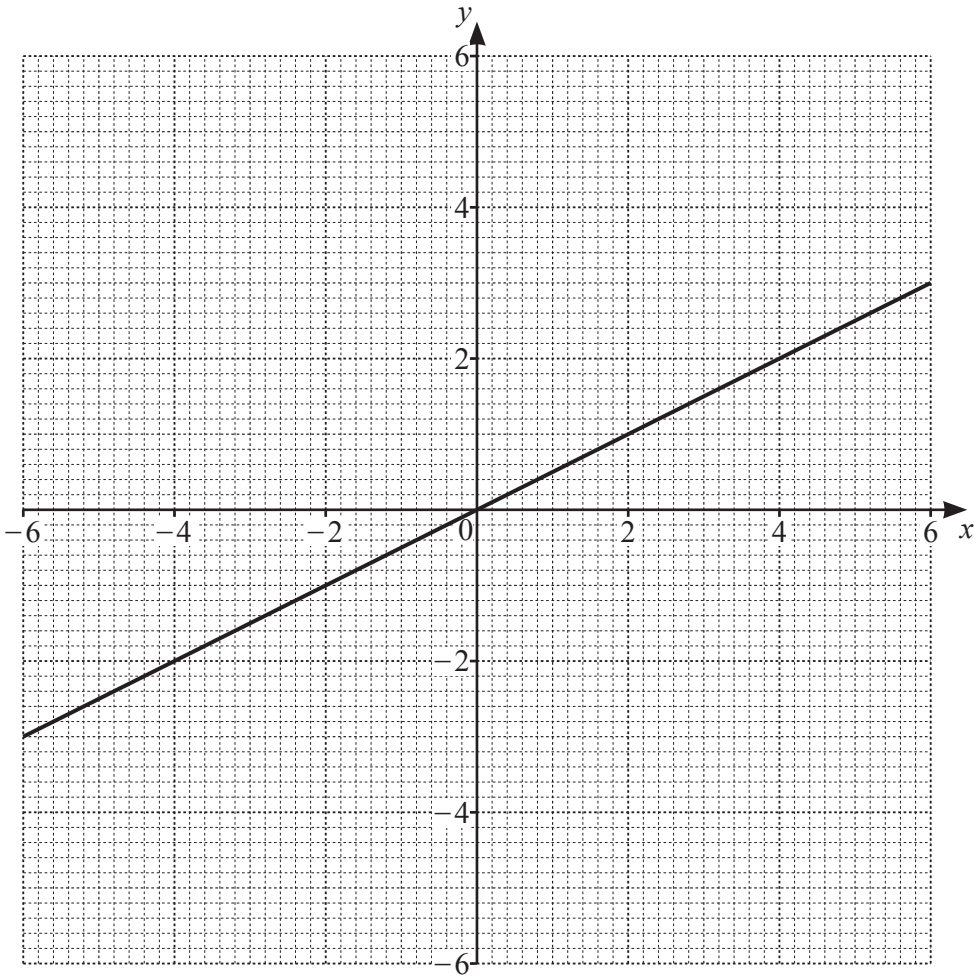

The line $2y = x$ is drawn on the grid.

(a) On the grid, draw the graph of

(i) $y = 2$, [1]

(ii) $y + x = 4$. [1]

(b) On the grid, shade and label the region **R**, defined by the following inequalities.

$x + y \leqslant 4$ $\quad 2y \geqslant x$ $\quad y \leqslant 2$ $\quad x \geqslant 0$ [2]

21 Factorise.

(a) $3cx + 2bx - 6cy - 4by$

..... [2]

(b) $6x^2 + 7x - 10$

..... [2]

22 A car has a mass of 2400 kg, correct to the nearest hundred kilograms.
A caravan has a mass of 1460 kg, correct to the nearest ten kilograms.

Calculate the lower bound for the total mass of the car and caravan.

..... kg [2]

23 **(a)** $a = \dfrac{b^2 + c}{d}$

(i) Find a when $b = 4 \times 10^2$, $c = 6 \times 10^3$ and $d = 2 \times 10^2$.
Write your answer in standard form.

$a =$ ..... [3]

(ii) Rearrange the formula to make b the subject.

$b =$ ..... [3]

(b) $m \times 10^4 + m \times 10^2 = 36\,360$

Work out $m \times 10^4 - m \times 10^2$.

..... [2]

© UCLES 2021

24 **(a)** $\mathbf{M} = \begin{pmatrix} 5 & 1 \\ 2 & 3 \end{pmatrix}$ $\mathbf{N} = \begin{pmatrix} 4 & -2 \\ 3 & 0 \end{pmatrix}$

Find $\mathbf{M} - \mathbf{N}$.

$\begin{pmatrix} \quad & \quad \\ \quad & \quad \end{pmatrix}$ [1]

(b) $\mathbf{P} = \begin{pmatrix} 2 & 4 \\ c & -5 \end{pmatrix}$ $\mathbf{Q} = \begin{pmatrix} 3 & 2 \\ -2 & d \end{pmatrix}$ $\mathbf{PQ} = \begin{pmatrix} -2 & 0 \\ 19 & 11 \end{pmatrix}$

Find the value of c and the value of d.

$c =$ .....

$d =$ ..... [2]

Question 25 is printed on the next page.

25

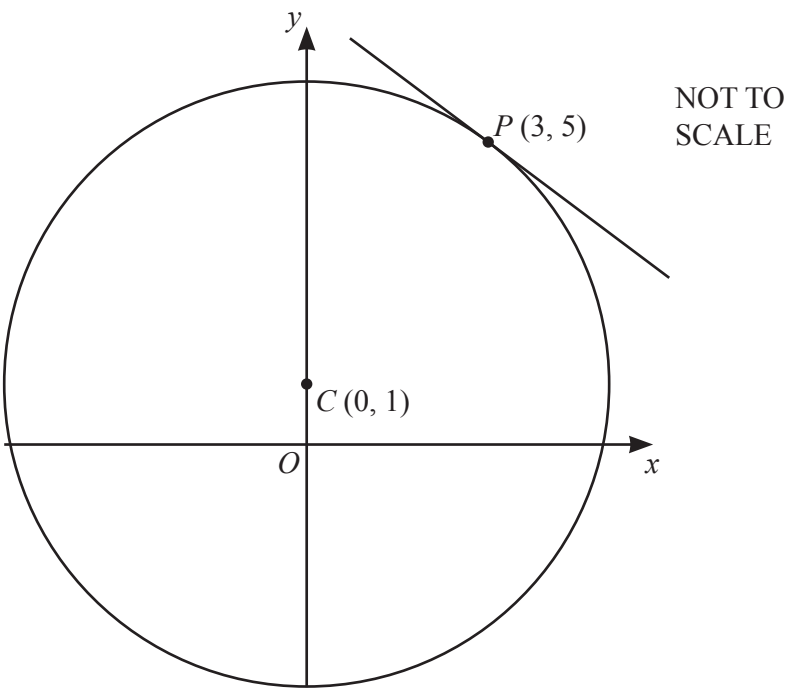

The diagram shows a circle centre C (0, 1).
P (3, 5) is a point on the circumference of the circle.

Find the equation of the tangent at P.

..... [4]

Permission to reproduce items where third-party owned material protected by copyright is included has been sought and cleared where possible. Every reasonable effort has been made by the publisher (UCLES) to trace copyright holders, but if any items requiring clearance have unwittingly been included, the publisher will be pleased to make amends at the earliest possible opportunity.

To avoid the issue of disclosure of answer-related information to candidates, all copyright acknowledgements are reproduced online in the Cambridge Assessment International Education Copyright Acknowledgements Booklet. This is produced for each series of examinations and is freely available to download at www.cambridgeinternational.org after the live examination series.

Cambridge Assessment International Education is part of the Cambridge Assessment Group. Cambridge Assessment is the brand name of the University of Cambridge Local Examinations Syndicate (UCLES), which itself is a department of the University of Cambridge.

© UCLES 2021