Cambridge Assessment International Education

Cambridge O Level

CANDIDATE NAME	

CENTRE NUMBER						CANDIDATE NUMBER				

7661411771

MATHEMATICS (SYLLABUS D) **4024/22**

Paper 2 **October/November 2021**

2 hours 30 minutes

You must answer on the question paper.

You will need: Geometrical instruments

INSTRUCTIONS

- Answer **all** questions.
- Use a black or dark blue pen. You may use an HB pencil for any diagrams or graphs.
- Write your name, centre number and candidate number in the boxes at the top of the page.
- Write your answer to each question in the space provided.
- Do **not** use an erasable pen or correction fluid.
- Do **not** write on any bar codes.
- You should use a calculator where appropriate.
- You may use tracing paper.
- You must show all necessary working clearly.
- Give non-exact numerical answers correct to 3 significant figures, or 1 decimal place for angles in degrees, unless a different level of accuracy is specified in the question.
- For π, use either your calculator value or 3.142.

INFORMATION

- The total mark for this paper is 100.
- The number of marks for each question or part question is shown in brackets [ ].

This document has **20** pages. Any blank pages are indicated.

DC (RW/CB) 208411/3
© UCLES 2021

1 **(a)** Jasmine buys a family holiday to India.
Here is some information about the cost.

Flights	\$700
Hotel	\$1550
Total cost	\$2250

(i) In October, Jasmine pays a deposit of 12% of the total cost.
She pays the rest of the total cost in December.

Calculate the amount she pays in December.

\$ ..... [2]

(ii) Find the ratio cost of flights : cost of hotel.
Give your answer in its simplest form.

..... : ..... [2]

(b) Jasmine changes \$350 into rupees.
The exchange rate is \$1 = 71.6 rupees.

On holiday, she spends 19 500 rupees.
She changes the rest back to dollars at the same exchange rate.

Calculate the amount of money she receives.
Give your answer correct to the nearest cent.

\$ ..... [3]

© UCLES 2021

(c) The table shows the number of tourists and the total tourist spending for some countries in 2016.

Country	Number of tourists	Total spending in dollars
China	5.93×10^7	4.44×10^{10}
India	1.46×10^7	2.31×10^{10}
Kenya	1.27×10^6	1.62×10^9
Madagascar	2.93×10^5	9.13×10^5

(i) Calculate how many more tourists visited India than Kenya in 2016.
Give your answer in standard form.

..... [1]

(ii) Calculate the average amount spent per tourist in China in 2016.
Give your answer correct to the nearest dollar.

$ ..... [2]

(iii) From 2014 to 2016, the total amount spent by tourists in Madagascar increased by 23.5%.

Calculate the amount spent by tourists in Madagascar in 2014.

$ ..... [2]

2 **(a)** The pie chart summarises the ages of people at a science fair.

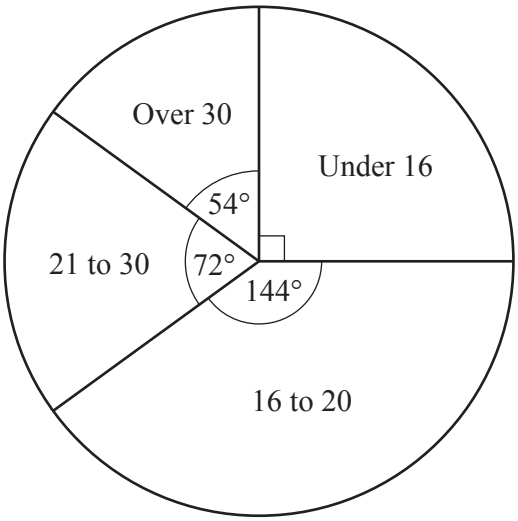

(i) Write down the modal class.

..... [1]

(ii) There were 90 people aged over 30 at the science fair.

Calculate the number of people aged 16 to 20.

..... [2]

(b) 250 students entered a science competition.
The table summarises their scores.

Score (s)	$0 < s \leqslant 40$	$40 < s \leqslant 60$	$60 < s \leqslant 70$	$70 < s \leqslant 80$	$80 < s \leqslant 100$
Frequency	36	48	64	60	42

(i) Complete the histogram to represent this data.

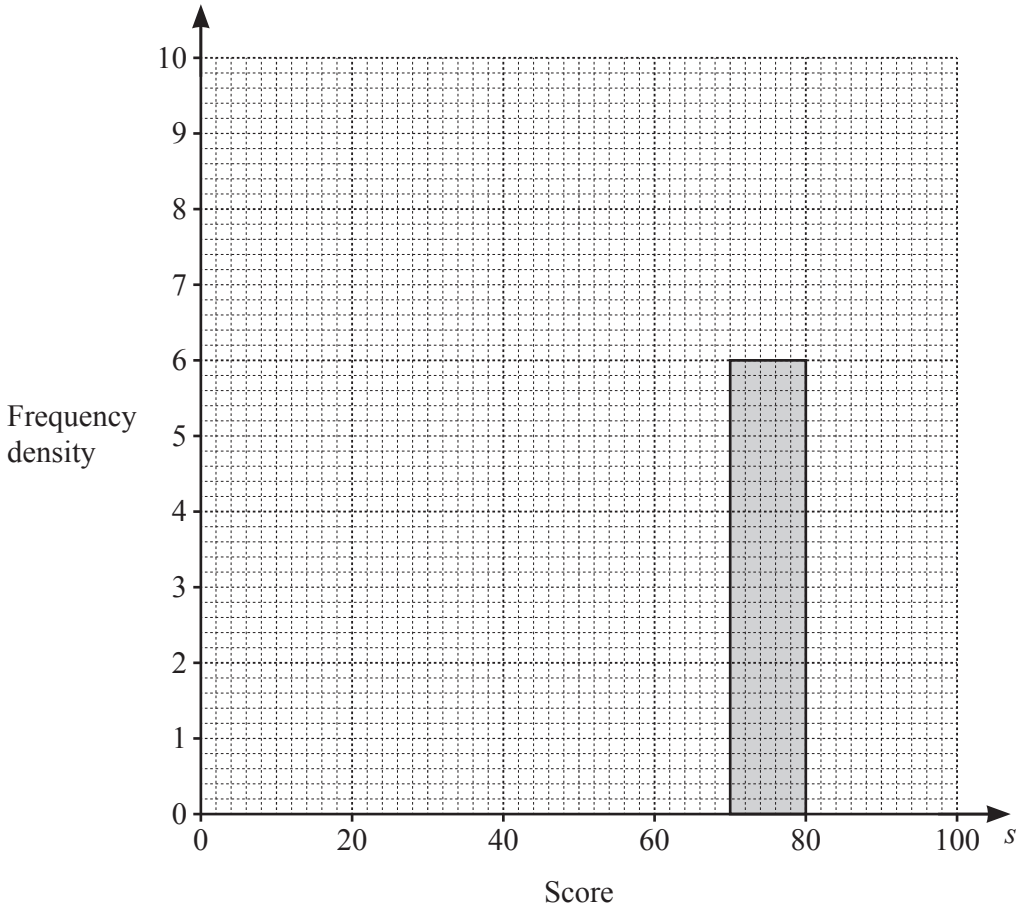

[3]

(ii) Students who scored 75 or more are awarded a distinction.

Find an estimate for the percentage of the 250 students who were awarded a distinction.

..... % [2]

3 **(a)** Complete the table for $y = \frac{x^3}{2} - 3x - 1$.

x	-3	-2	-1	0	1	2	3
y		1	1.5	-1	-3.5	-3	3.5

[1]

(b) On the grid, draw the graph of $y = \frac{x^3}{2} - 3x - 1$ for $-3 \leqslant x \leqslant 3$.

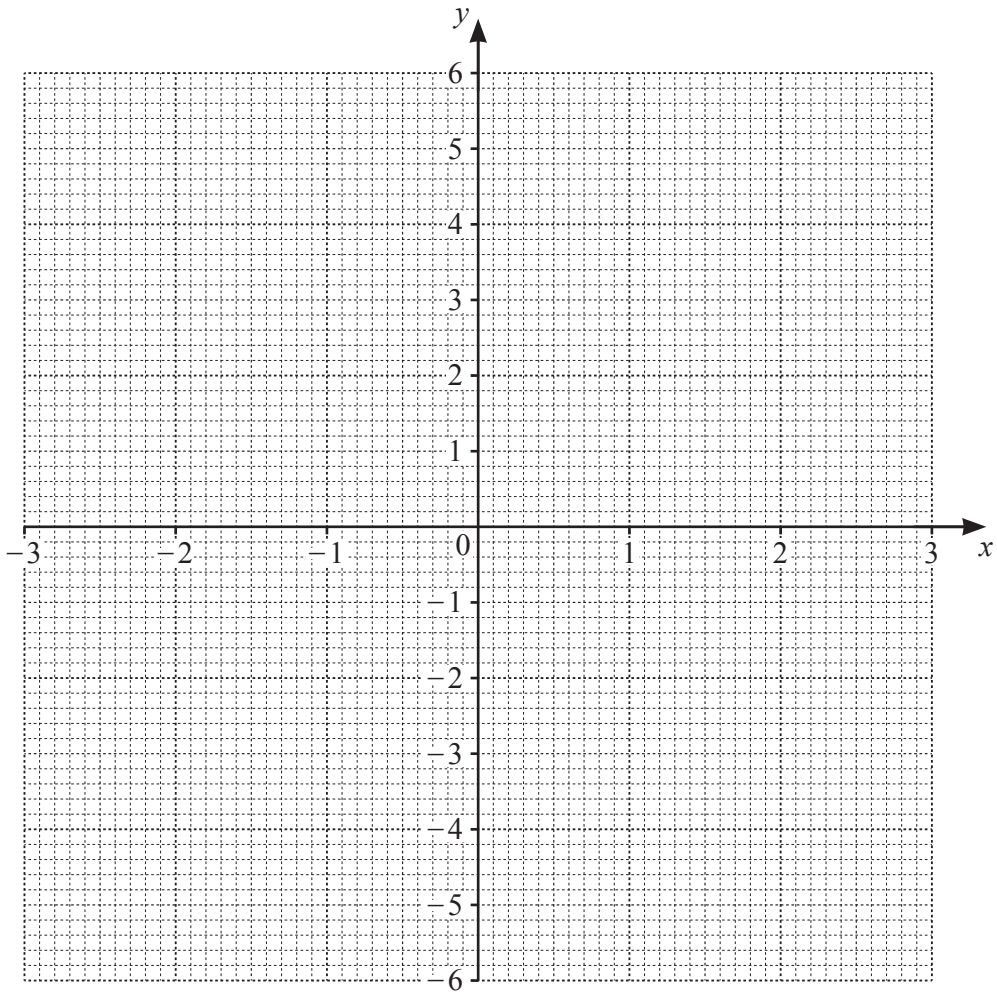

[3]

(c) Use your graph to explain why $x^3 - 6x - 2 = 6$ has only one solution.

..... [2]

(d) Line L passes through the points (1, 1) and (−2, −1).

(i) On the grid, draw line L. [1]

(ii) Work out the gradient of line L.

..... [2]

(iii) Find the x-coordinates of the points where line L intersects the curve $y = \frac{x^3}{2} - 3x - 1$.

$x =$ ..... , $x =$ ..... , $x =$ ..... [2]

4 **(a)** Here are the first three patterns in a sequence made from counters.

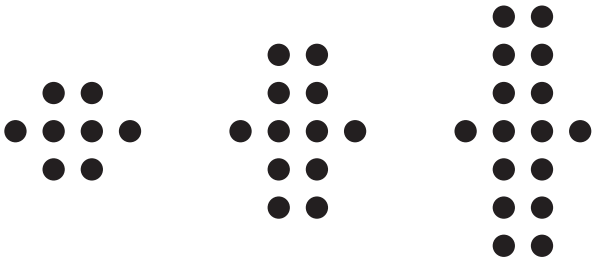

Pattern 1 Pattern 2 Pattern 3

(i) Complete the table for the patterns in this sequence.

Pattern number	1	2	3	4	5
Number of counters	8	12	16		

[1]

(ii) Find an expression, in terms of n, for the number of counters in Pattern n.

..... [2]

(iii) Jamal has 150 counters.
He uses these counters to make the largest pattern possible, Pattern p.

Find the value of p.

$p =$ ..... [2]

(b) The 4th term in a different sequence is 26.
This sequence is linear and the 8th term is 2.

(i) Find the first term of this sequence.

..... [2]

(ii) Find an expression, in terms of n, for the nth term of this sequence.

..... [2]

5 **(a)** The mass of 4 cards and 3 envelopes is 85 g.
The mass of 2 cards and 5 envelopes is 67 g.

Form a pair of simultaneous equations and solve them to find the mass of one card and the mass of one envelope.

Card = ... g

Envelope = ... g [4]

(b) Factorise $x^2 - 25$.

..... [1]

(c) Rearrange the formula $r = \frac{2t}{t-5}$ to make t the subject.

t = ... [3]

(d) Express as a single fraction in its simplest form.

$$\frac{4}{x-5}-\frac{3}{2x+1}$$

..... [3]

6 **(a)**

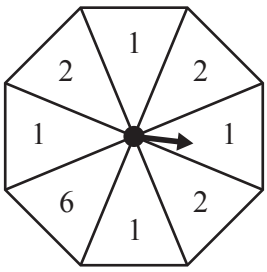

Asma has this fair 8-sided spinner.

(i) She spins the spinner once.

Find the probability that the score is

(a) 6,

..... [1]

(b) not 2.

..... [1]

(ii) Asma spins the spinner twice.

Find the probability that she scores two 2s.

..... [2]

(b) Leon has 7 red counters, 6 green counters and 3 white counters.
He takes two counters at random, without replacement.

Find the probability that the two counters are the same colour.

..... [3]

7 **(a)** P is the point $(-5, 2)$, Q is the point $(3, 7)$ and $\overrightarrow{QR} = \begin{pmatrix} -4 \\ 6 \end{pmatrix}$.

(i) Find the coordinates of the midpoint of PQ.

(..... , ...) [1]

(ii) Find the coordinates of point R.

(..... , ...) [1]

(iii) Find $|\overrightarrow{QR}|$.

$|\overrightarrow{QR}|$ = ... units [2]

(b)

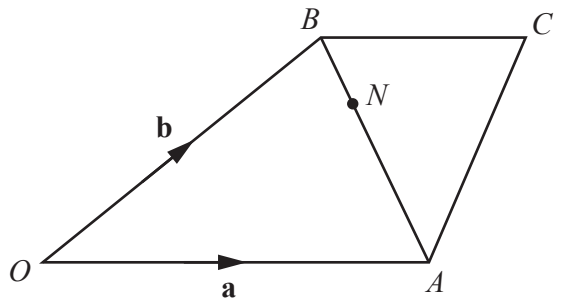

NOT TO SCALE

$OACB$ is a quadrilateral and N is a point on AB.
$\overrightarrow{OA} = \mathbf{a}$ and $\overrightarrow{OB} = \mathbf{b}$.
$\overrightarrow{OA} = 2\overrightarrow{BC}$ and $BN : NA = 1 : 3$.

Find, in terms of **a** and **b**, in its simplest form

(i) $\overrightarrow{AB}$,

$\overrightarrow{AB}$ = ... [1]

(ii) $\overrightarrow{NC}$.

$\overrightarrow{NC}$ = ... [3]

8 **[Volume of cone = $\frac{1}{3}\pi r^2 h$]**

[Curved surface area of a cone = $\pi r l$]

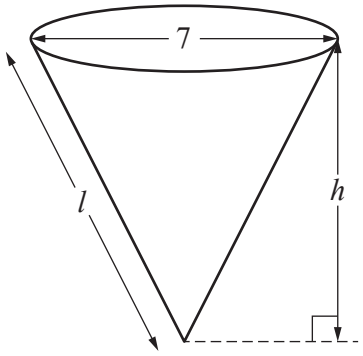

The diagram shows a paper cup in the shape of a cone.
The diameter of the top of the cup is 7 cm.
The volume of the cup is 110 cm^3.

(a) Show that the height of the cup, h cm, is 8.57 correct to 2 decimal places.

[3]

(b) Calculate the slant height, l cm, of the cup.

l = ... [2]

(c)

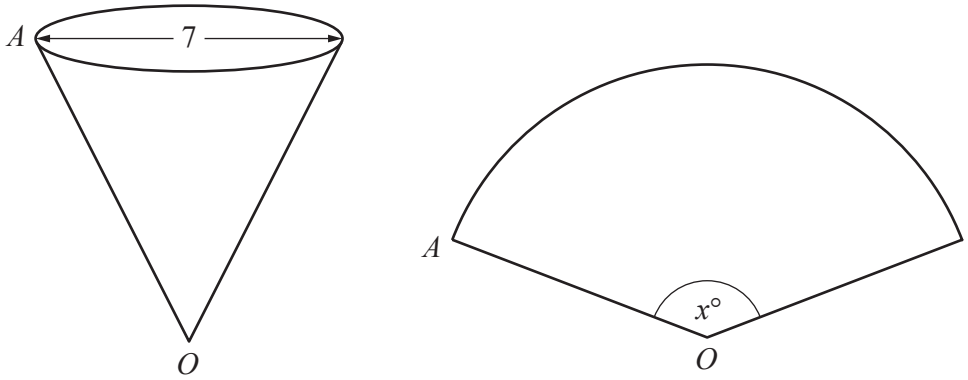

NOT TO SCALE

The cup is cut along the line OA.
It is opened out into a sector of a circle with centre O and sector angle $x°$.

Calculate the value of x.

$x =$ ..... [4]

(d) A second paper cup is mathematically similar to the cup with volume $110\ \text{cm}^3$.
The volume of the second cup is $165\ \text{cm}^3$.

Calculate the diameter of the top of the second cup.

..... cm [2]

9

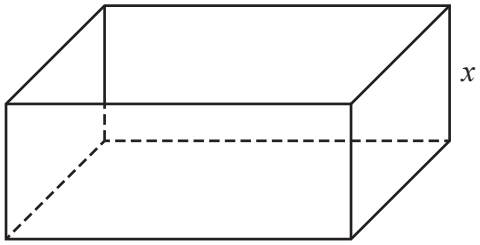

The diagram shows an open box in the shape of a cuboid.

The height of the box is x cm.
The width of the box is 5 cm more than its height.
The length of the box is two times its width.

(a) Write down expressions, in terms of x, for the width and the length of the box.

Width = ... cm

Length = ... cm [2]

(b) The external surface area of the open box is 210 cm^2.

Form an equation in x and show that it simplifies to $4x^2 + 25x - 80 = 0$.

[4]

(c) Solve the equation $4x^2 + 25x - 80 = 0$.
Show your working and give your answers correct to 2 decimal places.

$x =$ ..... or $x =$ ..... [3]

(d) Calculate the volume of the box.

..... cm^3 [2]

(e) The box is filled with chocolates.
The mass of the chocolates is 250 g, correct to the nearest 10 grams.
The total mass of the box and chocolates is 262 g, correct to the nearest gram.

Calculate the lower bound of the mass of the box.

..... g [3]

10

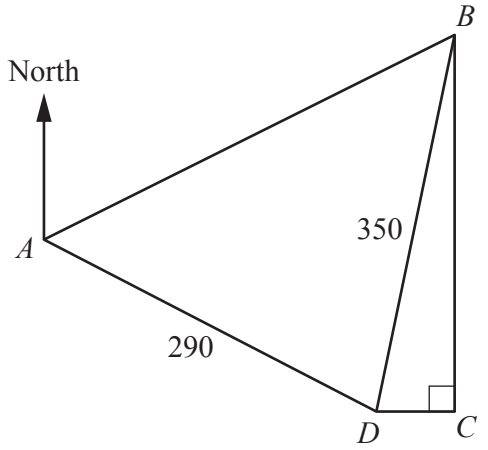

NOT TO SCALE

ABCD is a field on horizontal ground.

The bearing of *B* from *A* is 070°.
The bearing of *D* from *A* is 125°.
C is due south of *B* and due east of *D*.
AD = 290 m and *BD* = 350 m.

(a) Calculate the bearing of *D* from *B*.

..... [4]

(b) A vertical mast is positioned at D.
The angle of elevation of the top of the mast from A is 10°.

Calculate the angle of elevation of the top of the mast from C.

..... [5]

BLANK PAGE

Permission to reproduce items where third-party owned material protected by copyright is included has been sought and cleared where possible. Every reasonable effort has been made by the publisher (UCLES) to trace copyright holders, but if any items requiring clearance have unwittingly been included, the publisher will be pleased to make amends at the earliest possible opportunity.

To avoid the issue of disclosure of answer-related information to candidates, all copyright acknowledgements are reproduced online in the Cambridge Assessment International Education Copyright Acknowledgements Booklet. This is produced for each series of examinations and is freely available to download at www.cambridgeinternational.org after the live examination series.

Cambridge Assessment International Education is part of the Cambridge Assessment Group. Cambridge Assessment is the brand name of the University of Cambridge Local Examinations Syndicate (UCLES), which itself is a department of the University of Cambridge.

© UCLES 2021