Cambridge
O Level

Cambridge International Examinations
Cambridge Ordinary Level

CANDIDATE NAME	

CENTRE NUMBER							CANDIDATE NUMBER				

* 0 7 4 3 5 8 5 6 7 6 *

COMPUTER SCIENCE **2210/12**

Paper 1 Theory **October/November 2016**

1 hour 45 minutes

Candidates answer on the Question Paper.

No Additional Materials are required.

No calculators allowed.

READ THESE INSTRUCTIONS FIRST

Write your Centre number, candidate number and name in the spaces at the top of this page.
Write in dark blue or black pen.
You may use an HB pencil for any diagrams, graphs or rough working.
Do not use staples, paper clips, glue or correction fluid.
DO **NOT** WRITE IN ANY BARCODES.

Answer **all** questions.
No marks will be awarded for using brand names of software packages or hardware.

At the end of the examination, fasten all your work securely together.
The number of marks is given in brackets [ ] at the end of each question or part question.

The maximum number of marks is 75.

This document consists of **12** printed pages.

DC (AL) 135539
© UCLES 2016

CAMBRIDGE
International Examinations

1 **(a)** Give **two** reasons why a programmer would choose to write code in a low-level language.

1 .....

.....

.....

2 .....

.....

.....
[2]

(b) High-level languages require either an interpreter or a compiler to translate the program.

The table below lists a number of statements about language translators.

Tick (✓) to show which statements refer to interpreters and which refer to compilers.

Statements	Interpreter (✓)	Compiler (✓)
Translates the source code into machine code all at once		
Produces an executable file in machine code		
Executes a high-level language program one instruction at a time		
Once translated, the translator does not need to be present for the program to run		
An executable file is produced		

[5]

2 State **four** functions of an operating system.

1 .....

2 .....

3 .....

4 .....
[4]

© UCLES 2016

3 **(a)** Explain what is meant by:

(i) Serial data transmission

.....

.....

.....

.....[2]

(ii) Parallel data transmission

.....

.....

.....

.....[2]

(b) A computer in a factory is connected to a printer. The printer is located in an office 1 km away from the factory.

Identify which data transmission method would be most suitable for this connection.

.....

Give **two** reasons for your choice.

1 .....

.....

.....

2 .....

.....

.....

[3]

4 Nine bytes of data are transmitted from one computer to another. Even parity is used. An additional parity byte is also sent.

The ten bytes arrive at the destination computer as follows:

	parity bit	**bit 2**	**bit 3**	**bit 4**	**bit 5**	**bit 6**	**bit 7**	**bit 8**
byte 1	1	1	1	0	1	1	1	0
byte 2	0	0	0	0	0	1	0	1
byte 3	0	1	1	1	1	0	0	0
byte 4	1	1	0	0	0	0	0	0
byte 5	1	0	1	1	1	1	1	0
byte 6	0	1	0	1	1	0	0	1
byte 7	0	1	1	1	0	0	1	1
byte 8	0	0	1	1	0	1	1	0
byte 9	1	1	0	0	0	0	1	1
parity byte	0	0	1	0	0	0	1	0

One of the bits was corrupted during the data transmission.

(a) **Circle** the corrupt bit in the corrupt byte in the table above. [1]

(b) Explain how the corrupted bit was found.

.....

.....

.....

.....

.....

.....[2]

5 A computer uses an 8-bit register.

The 8-bit register contains binary integers.

(a) Write the denary (base 10) value represented by:

128	64	32	16	8	4	2	1
0	1	1	1	0	0	0	0

.....[1]

(b) All the bits in the register are shifted **one** place to the **right** as shown below.

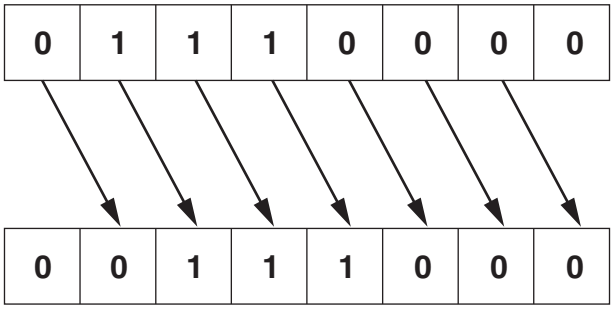

Write the denary number that is represented after this shift.

.....[1]

(c) State the effect the shift to the right had on the original denary number from **part (a)**.

.....[1]

(d) The original number in **part (a)** is shifted **three** places to the **right**.

(i) Show the new binary number:

[1]

(ii) Write the equivalent denary number.

.....[1]

(e) Describe the problems that could be caused if the original binary number in **part (a)** is shifted **five** places to the **right**.

.....

.....

.....

.....

.....[2]

6 **Four** computer terms and **eight** descriptions are shown below.

Draw lines to connect each computer term to the correct description(s).

Computer term	Description
	Data can be read but not altered
Arithmetic and logic unit (ALU)	Carries out operations such as addition and multiplication
	Stores bootstrap loader and BIOS
Control unit	Fetches each instruction in turn
	Carries out operations such as AND, OR, NOT
Random access memory (RAM)	Stores part of the operating system currently in use
Read only memory (ROM)	Stores data currently in use
	Manages execution of each instruction

[4]

7 **(a)** Complete the truth tables and name the single logic gate that could replace each logic circuit:

(i)

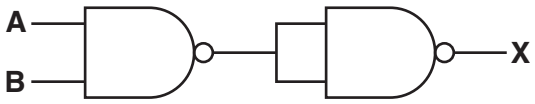

A	B	Working space	X
0	0		
0	1		
1	0		
1	1		

Single logic gate .....[3]

(ii)

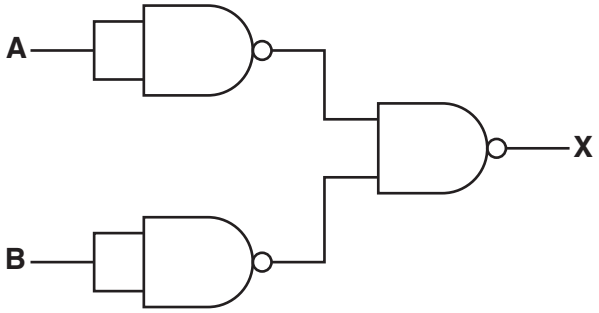

A	B	Working space	X
0	0		
0	1		
1	0		
1	1		

Single logic gate .....[3]

(b) **(i)** Draw a logic circuit to represent the following logic statement:

X = 1 if (A = 1 AND B = 1) OR ((B = NOT 1) AND C = 1)

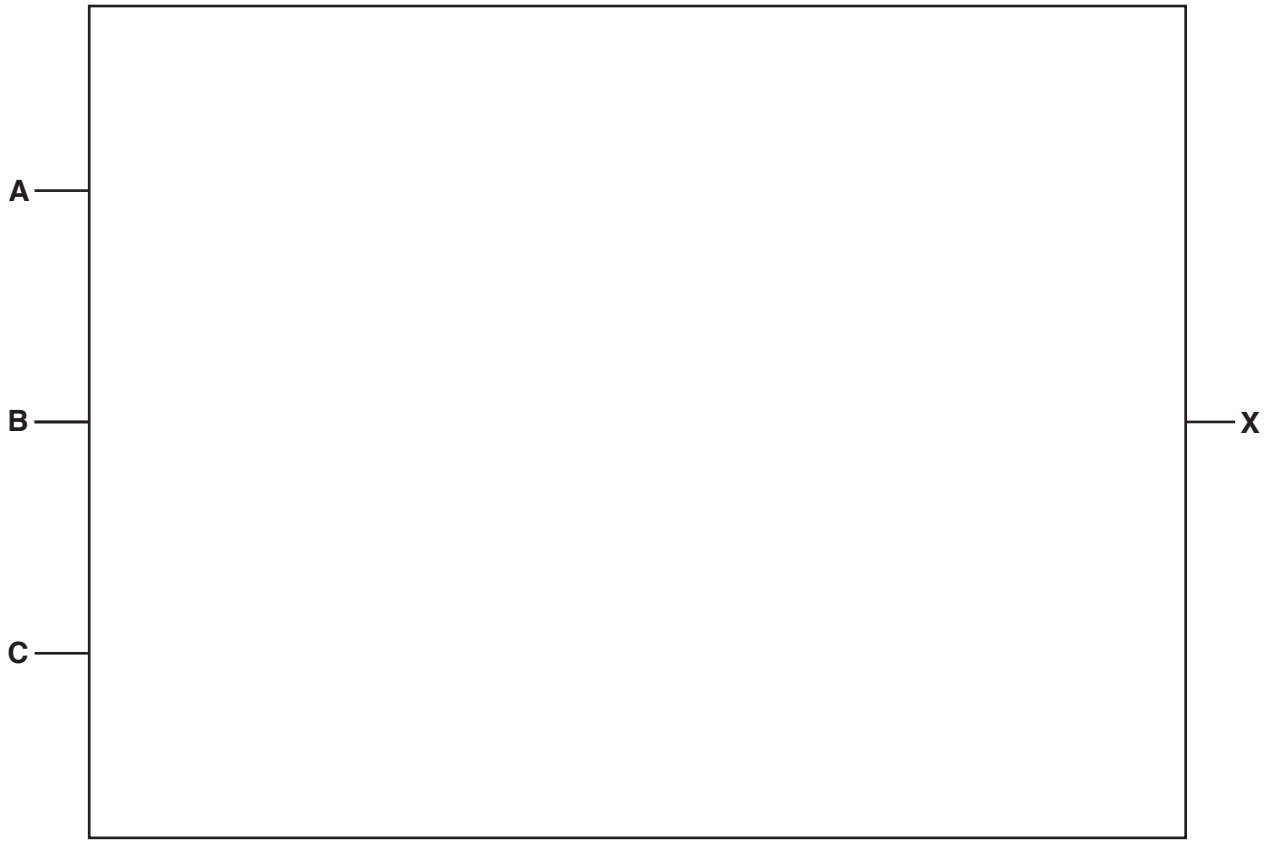

[4]

(ii) Complete the truth table for the logic statement in **part (b)(i)**.

A	B	C	Working space	X
0	0	0		
0	0	1		
0	1	0		
0	1	1		
1	0	0		
1	0	1		
1	1	0		
1	1	1		

[4]

© UCLES 2016

8 Identify whether the **four** statements about file compression are correct by writing TRUE or FALSE in the following table.

Statement	TRUE or FALSE
MIDI files store the actual music notes in a compressed format	
JPEG files are examples of lossless file compression	
MP3 files are, on average, 90% smaller than the music files stored on a CD	
MP4 files are examples of lossy file compression	

[4]

9 **(a)** Explain what is meant by a denial of service attack.

.....

.....

.....

.....[2]

(b) Name and describe **two other** potential security threats when using the Internet.

Security threat 1 .....

Description .....

.....

.....

Security threat 2 .....

Description .....

.....

.....

[4]

10 **(a)** Describe what is meant by HTML.

.....

.....

.....

.....

.....

.....[3]

(b) The following URL is typed in:

http://www.cie.org.uk/ComputerSciencePapers

This URL is composed of three parts.

State the part of this URL that is the:

File name .....

Protocol .....

Web server name .....
[3]

11 A security system is installed in a house. A hexadecimal number is entered to activate or deactivate the alarm.

(a) The alarm code is set to hexadecimal number **2 A F**

Show how this number would be stored in a 12-bit binary register.

[3]

(b) Identify **two** sensors that the security system could use to detect intruders.

Describe how each sensor could be used in the security system.

Sensor 1 .....

Description .....

.....

.....

.....

Sensor 2 .....

Description .....

.....

.....

.....

[6]

12 Explain the differences between **freeware** and **free software**.

.....

.....

.....

.....

.....

.....

.....

.....

.....

.....[4]

Permission to reproduce items where third-party owned material protected by copyright is included has been sought and cleared where possible. Every reasonable effort has been made by the publisher (UCLES) to trace copyright holders, but if any items requiring clearance have unwittingly been included, the publisher will be pleased to make amends at the earliest possible opportunity.

To avoid the issue of disclosure of answer-related information to candidates, all copyright acknowledgements are reproduced online in the Cambridge International Examinations Copyright Acknowledgements Booklet. This is produced for each series of examinations and is freely available to download at www.cie.org.uk after the live examination series.

Cambridge International Examinations is part of the Cambridge Assessment Group. Cambridge Assessment is the brand name of University of Cambridge Local Examinations Syndicate (UCLES), which is itself a department of the University of Cambridge.

© UCLES 2016