Cambridge Assessment International Education

Cambridge International AS & A Level

CANDIDATE NAME	

CENTRE NUMBER						CANDIDATE NUMBER				

2165639790

CHEMISTRY **9701/42**

Paper 4 A Level Structured Questions **May/June 2021**

2 hours

You must answer on the question paper.

You will need: Data booklet

INSTRUCTIONS

- Answer **all** questions.
- Use a black or dark blue pen. You may use an HB pencil for any diagrams or graphs.
- Write your name, centre number and candidate number in the boxes at the top of the page.
- Write your answer to each question in the space provided.
- Do **not** use an erasable pen or correction fluid.
- Do **not** write on any bar codes.
- You may use a calculator.
- You should show all your working, use appropriate units and use an appropriate number of significant figures.

INFORMATION

- The total mark for this paper is 100.
- The number of marks for each question or part question is shown in brackets [ ].

This document has **24** pages. Any blank pages are indicated.

IB21 06_9701_42/3RP
© UCLES 2021

PapaCambridge

Answer **all** the questions in the spaces provided.

1 **(a)** An aqueous solution of chromium(III) contains the green $[Cr(H_2O)_6]^{3+}$ complex ion.

(i) Complete the electronic configuration of an isolated, gaseous Cr^{3+} ion.

$1s^2$ ..... [1]

(ii) Define the term *complex ion*.

.....

..... [1]

(b) $[Cr(H_2O)_6]^{3+}(aq)$ shows some similar chemical properties to $[Co(H_2O)_6]^{2+}(aq)$.

Samples of $[Cr(H_2O)_6]^{3+}$ are reacted separately with either NaOH(aq), $H_2O_2(aq)$, or excess $NH_3(aq)$.

Use this information and the *Data Booklet* to suggest the formula of the chromium species formed. State the type of reaction taking place in each case.

reagent added to $[Cr(H_2O)_6]^{3+}(aq)$	formula of chromium species formed	type of reaction
NaOH(aq)		
$H_2O_2(aq)$		
an excess of $NH_3(aq)$		

[5]

(c) $[Cr(H_2O)_6]^{2+}$ and $[Cr_2(O_2CCH_3)_4(H_2O)_2]$ are both complexes of chromium(II) and have different colours.

Explain why the colours of these complexes are different.

.....

.....

.....

..... [2]

PapaCambridge

(d) The structure of $[Cr_2(O_2CCH_3)_4(H_2O)_2]$ is shown. Ethanoate ions act as ligands in this complex. The ethanoate ligand, $CH_3CO_2^-$, is shown as .

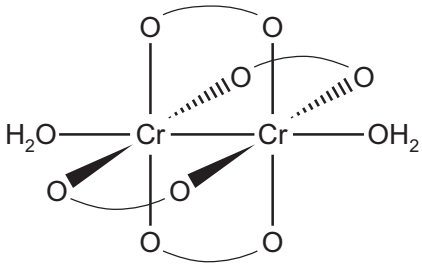

(i) Water and ethanoate ions behave as different types of ligand in this complex.

Suggest an explanation for this statement.

.....

..... [1]

(ii) Deduce the coordination number of Cr and the geometry around each Cr atom in this structure.

coordination number .....

geometry around Cr atom .....
[1]

(iii) State the type of bond between the two atoms in the Cr–Cr bond.

..... [1]

(e) The $[Cr_2(O_2CCH_3)_4(H_2O)_2]$ complex reacts with aqueous acid to form $Cr^{2+}(aq)$ ions.

$Cr^{2+}(aq)$ ions react with $O_2(aq)$ under acidic conditions. $Cr^{3+}(aq)$ ions are formed.

Use the *Data Booklet* to answer the following questions.

(i) Construct an ionic equation for the reaction of $Cr^{2+}(aq)$ with $O_2(aq)$ under acidic conditions.

..... [2]

(ii) Calculate $E^{\ominus}_{cell}$ for the reaction in **(e)(i)**.

$E^{\ominus}_{cell}$ = ... V [1]

[Total: 15]

PapaCambridge

2 **(a)** State and explain the trend observed in the thermal stability of the Group 2 nitrates.

.....

.....

.....

.....

..... [3]

(b) **(i)** Lead(II) nitrate, $Pb(NO_3)_2$, decomposes on heating in a similar manner to the Group 2 nitrates.

Write an equation for the decomposition of lead(II) nitrate.

..... [1]

(ii) Suggest how the ease of decomposition of $Pb(NO_3)_2$ would compare to that of $Ba(NO_3)_2$. Explain your answer. You may find it useful to refer to the *Data Booklet*.

.....

..... [1]

(c) **(i)** Barium ethanedioate, BaC_2O_4, decomposes on heating to produce barium oxide and a mixture of two different gases.

Construct an equation for the decomposition of barium ethanedioate.

..... [1]

© UCLES 2021

PapaCambridge

(ii) An impure sample of BaC_2O_4, of mass 0.500 g, is added to 50.0 cm^3 of 0.0200 mol dm^{-3} acidified MnO_4^-(aq), an excess. A redox reaction takes place and all the BaC_2O_4 reacts.

The resulting solution, containing unreacted acidified MnO_4^-, is titrated with 0.0500 mol dm^{-3} Fe^{2+}(aq).

The end-point is reached when 30.40 cm^3 of 0.0500 mol dm^{-3} Fe^{2+}(aq) has been added.

$$C_2O_4^{2-} \rightleftharpoons 2CO_2 + 2e^-$$

$$MnO_4^- + 8H^+ + 5e^- \rightleftharpoons Mn^{2+} + 4H_2O$$

$$Fe^{2+} \rightleftharpoons Fe^{3+} + e^-$$

Calculate the percentage by mass of BaC_2O_4 in the 0.500 g impure sample. Show your working.
[M_r: BaC_2O_4, 225.3]

percentage by mass of BaC_2O_4 = ... [4]

(d) Barium hydroxide, $Ba(OH)_2$, is completely dissociated in aqueous solution.

Calculate the pH of 0.120 mol dm^{-3} $Ba(OH)_2$(aq) at 298 K.

pH = ... [2]

[Total: 12]

PapaCambridge

3 **(a)** **(i)** Define the term *standard electrode potential*.

.....

.....

..... [2]

Three redox systems, **A**, **B** and **C**, are shown. The ligand 1,2-diaminoethane, $H_2NCH_2CH_2NH_2$, is represented by en.

A	$[Ru(H_2O)_6]^{3+} + e^- \rightleftharpoons [Ru(H_2O)_6]^{2+}$
B	$[Ru(NH_3)_6]^{3+} + e^- \rightleftharpoons [Ru(NH_3)_6]^{2+}$
C	$[Ru(en)_3]^{3+} + e^- \rightleftharpoons [Ru(en)_3]^{2+}$

Two electrochemical cells are set up to compare the standard electrode potentials, $E^{\ominus}$, of three half-cells. The diagrams show the relative potential of each electrode.

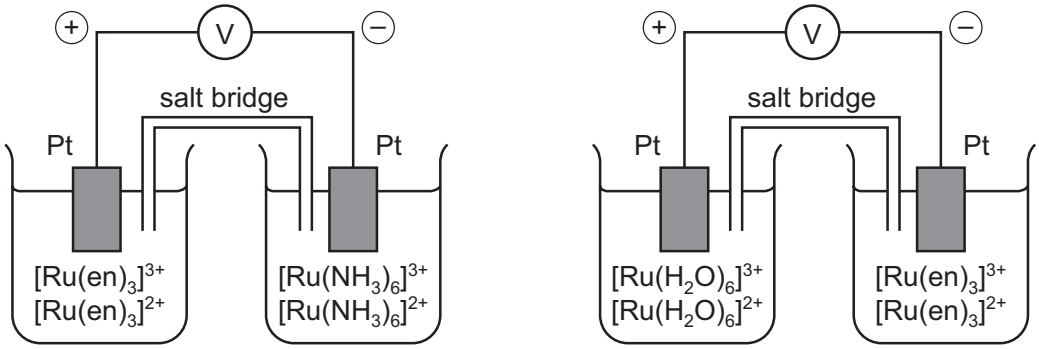

(ii) Use this information to complete the table by adding the labels **A**, **B** and **C** to deduce the order of $E^{\ominus}$ for the three half-cells.

$E^{\ominus}$	redox system
most negative	
↑	
least negative	

[1]

PapaCambridge

(iii) The complex $[Ru(en)_3]^{3+}$ shows stereoisomerism. The ligand en is bidentate.

Draw three-dimensional diagrams to show the two isomers of $[Ru(en)_3]^{3+}$. Represent the ligand en by using 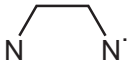

.

Name the type of stereoisomerism.

isomer 1	isomer 2

type of stereoisomerism .....
[3]

(b) (i) An electrochemical cell consists of a Br_2/Br^- half-cell and a Ag^+/Ag half-cell, under standard conditions.

Use the *Data Booklet* to calculate the $E^{\ominus}_{cell}$. Deduce the direction of electron flow in the wire through the voltmeter between these two half-cells.

$E^{\ominus}_{cell}$ = ... V

direction of electron flow from ..... to ..... [1]

(ii) Water is added to the Ag^+/Ag half-cell in **(b)(i)**.

Suggest the effect of this addition on the E_{cell}. Place a tick (✓) in the appropriate box.

less positive	no change	more positive

Explain your answer.

.....

.....

..... [2]

PapaCambridge

(c) Silver bromide, AgBr, dissolves in an aqueous solution of $S_2O_3^{2-}$ ions to form the complex ion $[Ag(S_2O_3)_2]^{3-}$. The $S_2O_3^{2-}$ ions act as monodentate ligands.

equilibrium 1 $\quad AgBr(s) + 2S_2O_3^{2-}(aq) \rightleftharpoons [Ag(S_2O_3)_2]^{3-}(aq) + Br^-(aq)$

(i) Define the term *ligand*.

.....

..... [1]

(ii) Write an expression for the equilibrium constant, K_c, for equilibrium 1.

K_c =

[1]

(iii) Some additional data are given about the dissolution of AgBr in $S_2O_3^{2-}(aq)$.

equilibrium constant	numerical value
solubility product, K_{sp}, of AgBr	5.4×10^{-13}
stability constant, K_{stab}, of $[Ag(S_2O_3)_2]^{3-}$	2.9×10^{13}

Use your answer to **(c)(ii)** and these data to calculate K_c for equilibrium 1. Include the units for K_c.

K_c = ... units ..... [2]

(d) The numerical values for the stability constants, K_{stab}, of two other silver(I) complexes are given.

silver(I) complex	numerical value of K_{stab}
$[Ag(CN)_2]^-$	5.3×10^{18}
$[Ag(NH_3)_2]^+$	1.6×10^{7}

An aqueous solution containing Ag^+ is added to a solution containing equal concentrations of $CN^-(aq)$, $NH_3(aq)$ and $S_2O_3^{2-}(aq)$. The mixture is left to reach equilibrium.

Deduce the relative concentrations of $[Ag(CN)_2]^-$, $[Ag(NH_3)_2]^+$ and $[Ag(S_2O_3)_2]^{3-}$ present in the resulting mixture. Explain your answer.

..... > ..... > .....

highest concentration $\qquad$ lowest concentration

.....

..... [2]

[Total: 15]

PapaCambridge

4 **(a)** **(i)** Define the term *lattice energy*.

.....

.....

..... [2]

(ii) Use the following data to calculate a value for the enthalpy change of solution of copper(II) chloride, $CuCl_2(s)$. You might find it helpful to construct an energy cycle.

enthalpy change of hydration of Cl^- = –378 kJ mol^{-1}
enthalpy change of hydration of Cu^{2+} = –2099 kJ mol^{-1}
lattice energy of $CuCl_2(s)$ = –2824 kJ mol^{-1}

enthalpy change of solution of $CuCl_2(s)$ = ... kJ mol^{-1} [2]

(iii) The enthalpy change of hydration of Ca^{2+} is –1579 kJ mol^{-1}.

Use the *Data Booklet* to suggest why there is a big difference in the values of ΔH_{hyd} for Ca^{2+} and Cu^{2+}.

.....

.....

..... [2]

(b) **(i)** Identify the substances formed at the anode and at the cathode during the electrolysis of saturated $CaCl_2(aq)$.

at the anode .....

at the cathode .....
[1]

(ii) Calcium can be produced by the electrolysis of molten calcium chloride, $CaCl_2(l)$.

Calculate the mass, in g, of Ca formed when a current of 0.75 A passes through $CaCl_2(l)$ for 60 minutes.
[A_r: Ca, 40.1]

mass of Ca = ... g [2]

PapaCambridge

(c) **(i)** Explain what is meant by the term *entropy of a system*.

.....

..... [1]

(ii) Place one tick (✓) in each row of the table to show the sign of each entropy change, ΔS.

process	ΔS is negative	ΔS is zero	ΔS is positive
NaC*l* dissolving in water			
water solidifying to ice			

[1]

(iii) The evaporation of one mole of water has a standard Gibbs free energy change, $\Delta G^{\ominus}$, of +8.6 kJ at 25 °C.

Sketch a graph on the axes to show how $\Delta G^{\ominus}$ changes for this process between 25 °C and 150 °C at 101 kPa.

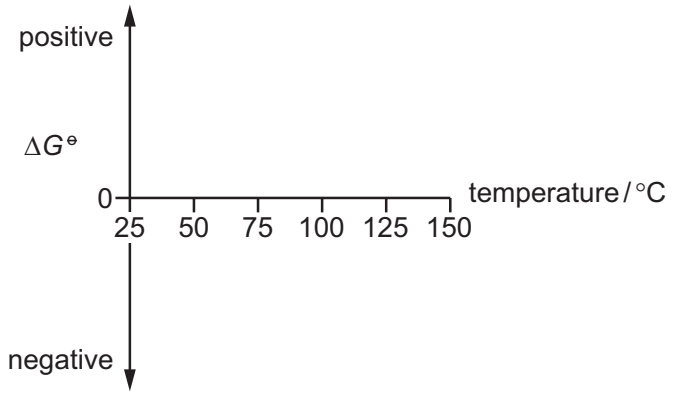

[2]

(d) The reaction between A and B is feasible at low temperatures but is **not** feasible at high temperatures.

$$A + B \rightleftharpoons C + D$$

Deduce the signs of ΔH and ΔS for this reaction and explain why the feasibility changes with temperature.

sign of ΔH = ... sign of ΔS = ...

.....

.....

.....

..... [2]

[Total: 15]

© UCLES 2021

PapaCambridge

5 **(a)** Describe and explain the relative basicities of phenylamine, ethylamine and 4-nitrophenylamine.

..... > ..... > .....

most basic least basic

.....

.....

.....

.....

..... [4]

(b) The dye **R** can be synthesised from 4-nitrophenylamine in two steps.

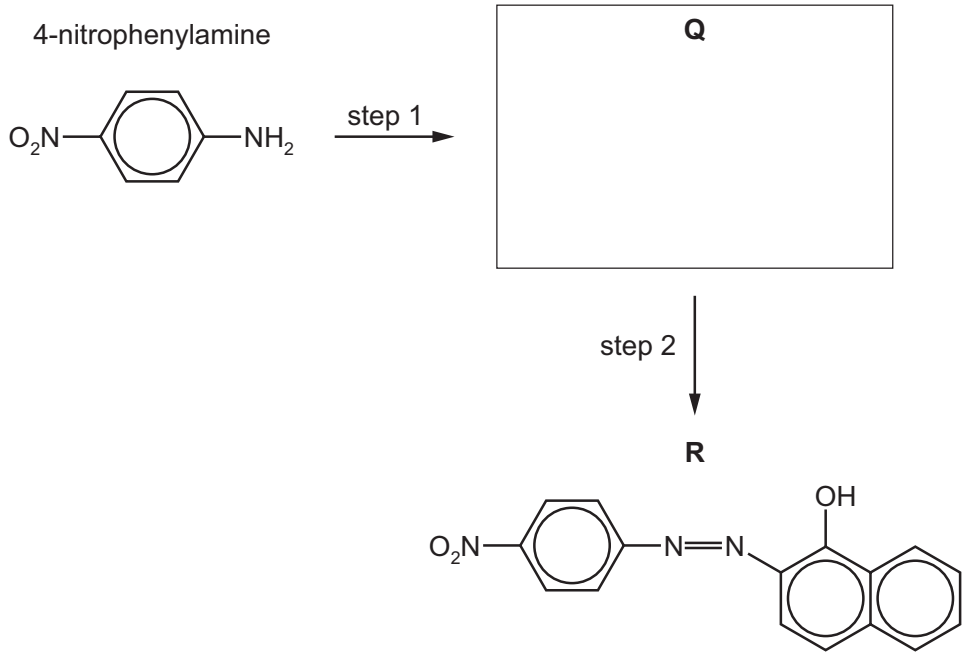

(i) Deduce and draw the structure of the organic salt **Q** in the box. [1]

(ii) Suggest reagents and conditions for step 1 and 2 in **(b)**.

step 1 .....

step 2 .....

[2]

PapaCambridge

(c) Compound **G** can be synthesised from methylbenzene in three steps.

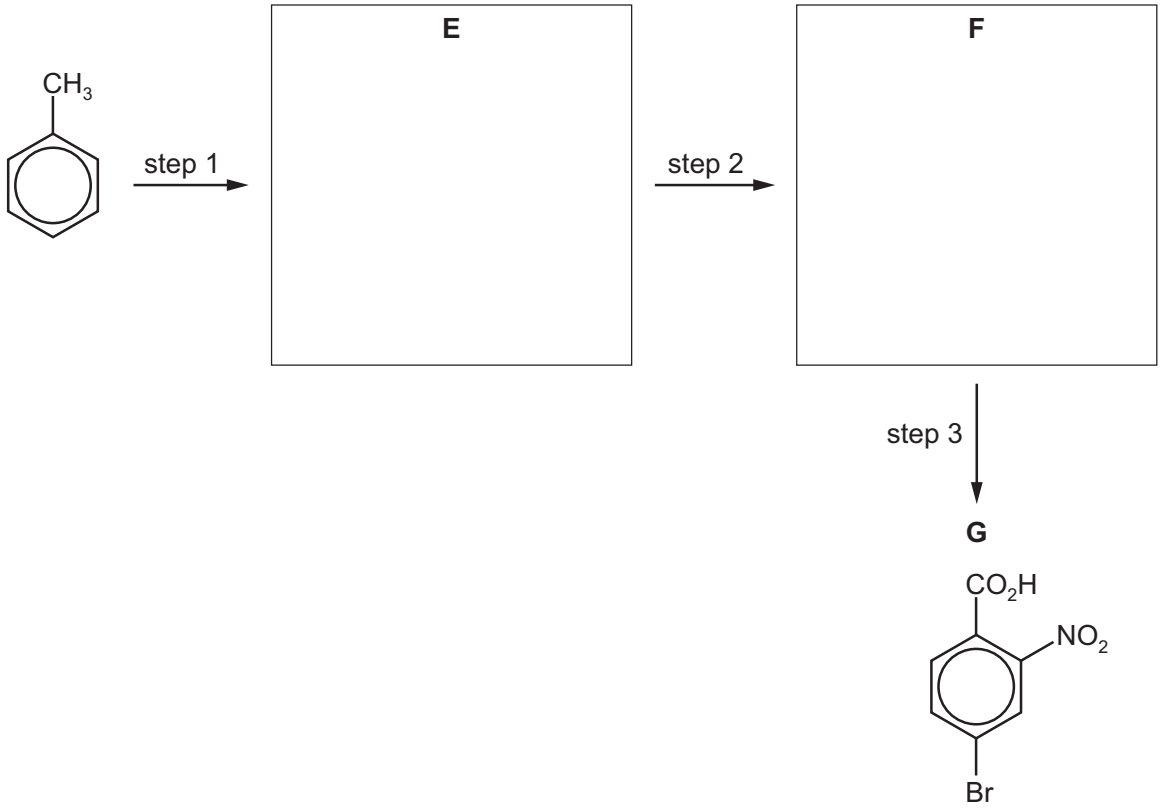

(i) Give the systematic name of compound **G**.

..... [1]

(ii) Deduce the identities of **E** and **F** and draw their structures in the boxes. [2]

(iii) Suggest reagents and conditions for each of steps 1 to 3 in **(c)**.

step 1 .....

step 2 .....

step 3 .....
[3]

[Total: 13]

PapaCambridge

6 **(a)** There are four possible structural isomers of C_8H_{10} that contain a benzene ring.

Draw the **skeletal** formulae of the four structural isomers in the appropriate boxes. The number of peaks observed in the carbon-13 (^{13}C) NMR spectrum of each compound is given.

isomer 1	isomer 2
three peaks in ^{13}C NMR	four peaks in ^{13}C NMR
isomer 3	**isomer 4**
five peaks in ^{13}C NMR	six peaks in ^{13}C NMR

[4]

PapaCambridge

(b) A three-step synthesis of **X** ($C_{10}H_{10}O$) from benzene is suggested as shown.

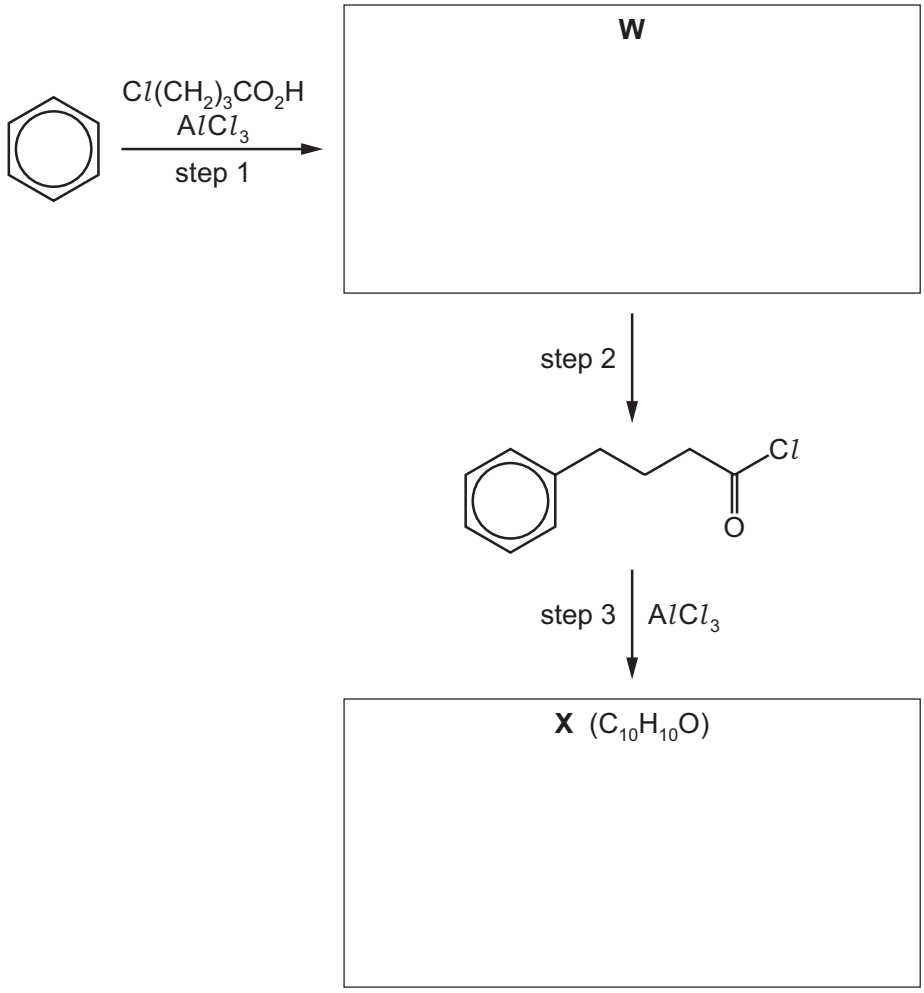

(i) Step 1 is the alkylation of benzene by electrophilic substitution.
Use R–C*l* to represent $Cl(CH_2)_3CO_2H$.

Write an equation for the formation of an electrophile from R–C*l* and $AlCl_3$.

..... [1]

(ii) Deduce and draw the structures of **W** and **X** in the boxes. [2]

(iii) Suggest the reagents and conditions for step 2.

..... [1]

PapaCambridge

(iv) Complete the mechanism for the reaction of benzene with the electrophile formed in **(b)(i)**.

Include all relevant charges and curly arrows showing the movement of electron pairs.

Draw the structure of the intermediate.

[3]

[Total: 11]

PapaCambridge

7 **(a)** In aqueous solution, chlorine dioxide, ClO_2, reacts with hydroxide ions as shown.

$$2ClO_2 + 2OH^- \rightarrow ClO_3^- + ClO_2^- + H_2O$$

A series of experiments is carried out using different concentrations of ClO_2 and OH^-. The table shows the results obtained.

experiment	$[ClO_2]$ / mol dm^{-3}	$[OH^-]$ / mol dm^{-3}	initial rate / mol dm^{-3} min^{-1}
1	0.020	0.030	7.20×10^{-4}
2	0.020	0.120	2.88×10^{-3}
3	0.050	0.030	4.50×10^{-3}

(i) Explain the term *order of reaction*.

.....

..... [1]

(ii) Use the data in the table to determine the order of reaction with respect to each reactant, ClO_2 and OH^-.

Explain your reasoning.

.....

.....

.....

.....

.....

..... [2]

(iii) Use your answer to **(a)(ii)** to construct the rate equation for this reaction.

rate = ... [1]

(iv) Use your rate equation and the data from experiment 1 to calculate the rate constant, *k*, for this reaction.
Include the units of *k*.

k = ... units ..... [2]

PapaCambridge

Question 7 continues on the next page.

PapaCambridge

(b) The decomposition of benzenediazonium ions, $C_6H_5N_2^+$, using a large excess of water, is a first-order reaction.

The graph shows the results obtained.

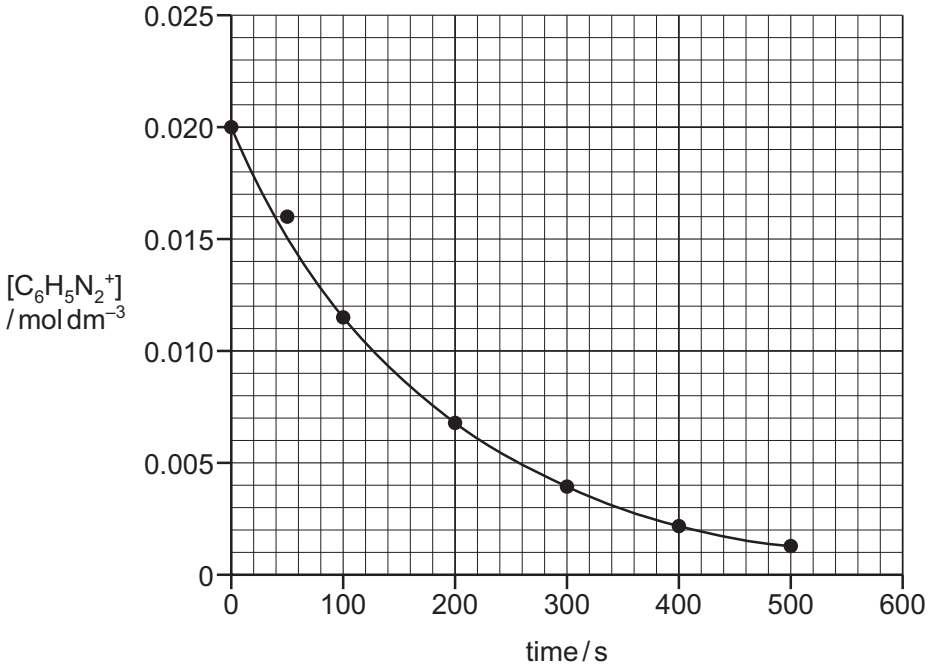

(i) Draw the structure of the organic product formed in this reaction.

[1]

(ii) Use the graph to determine the rate of reaction at 100 s. Show your working.

rate = ... $mol\,dm^{-3}\,s^{-1}$ [1]

PapaCambridge

(c) Sketch a concentration–time graph for a **zero-order** reaction.

Use your graph to suggest how successive half-lives for a zero-order reaction vary as the concentration of a reactant decreases. Indicate this by placing a tick (✓) in the appropriate box in the table.

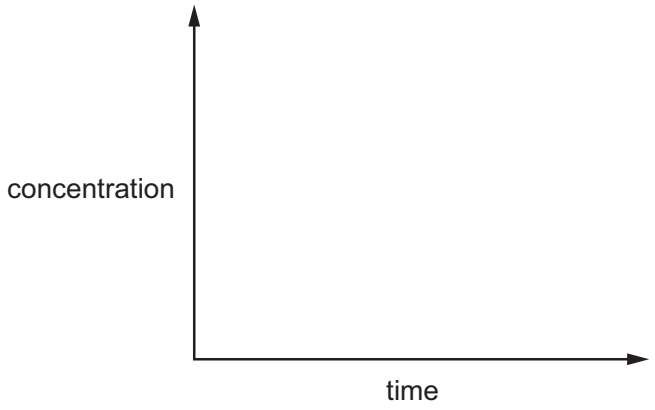

successive half-lives decrease	no change in successive half-lives	successive half-lives increase

[1]

[Total: 9]

PapaCambridge

8 **(a)** State and explain the relative rate of hydrolysis of acyl chlorides, alkyl chlorides and aryl chlorides.

..... > ..... > .....

fastest slowest

.....

.....

.....

.....

..... [3]

PapaCambridge

(b) The drug remifentanil is shown.

remifentanil

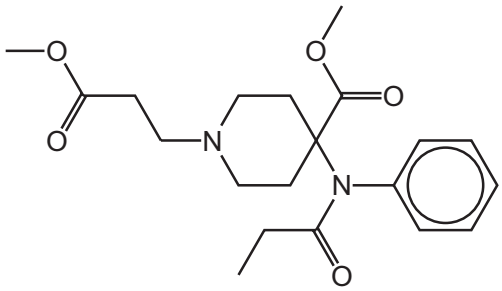

Remifentanil is **completely** hydrolysed under acidic conditions. Three different organic compounds are formed.

Draw the structures for these organic compounds in the boxes.

[3]

PapaCambridge

(c) Compound **Y**, $C_5H_{10}O_2$, reacts with Na_2CO_3(aq) to evolve bubbles of gas. The proton (^1H) NMR spectrum of compound **Y** in D_2O is shown.

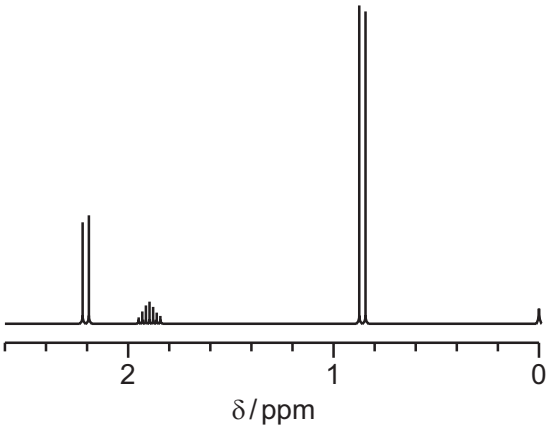

(i) Use this information to suggest a structure for **Y**.

[1]

(ii) Use the *Data Booklet*, the proton (^1H) NMR spectrum and your answer to **(c)(i)** to complete the table.

chemical shift (δ)	environment of proton	splitting pattern	number of ^1H atoms responsible for the peak
0.95			
1.90			
2.20			

[3]

[Total: 10]

© UCLES 2021

PapaCambridge

BLANK PAGE

PapaCambridge

BLANK PAGE

Permission to reproduce items where third-party owned material protected by copyright is included has been sought and cleared where possible. Every reasonable effort has been made by the publisher (UCLES) to trace copyright holders, but if any items requiring clearance have unwittingly been included, the publisher will be pleased to make amends at the earliest possible opportunity.

To avoid the issue of disclosure of answer-related information to candidates, all copyright acknowledgements are reproduced online in the Cambridge Assessment International Education Copyright Acknowledgements Booklet. This is produced for each series of examinations and is freely available to download at www.cambridgeinternational.org after the live examination series.

Cambridge Assessment International Education is part of the Cambridge Assessment Group. Cambridge Assessment is the brand name of the University of Cambridge Local Examinations Syndicate (UCLES), which itself is a department of the University of Cambridge.

© UCLES 2021

PapaCambridge