Cambridge O Level

Cambridge International Examinations
Cambridge Ordinary Level

CANDIDATE NAME	

CENTRE NUMBER						CANDIDATE NUMBER				

BIOLOGY **5090/62**

Paper 6 Alternative to Practical **October/November 2015**

1 hour

Candidates answer on the Question Paper.

No Additional Materials are required.

READ THESE INSTRUCTIONS FIRST

Write your Centre number, candidate number and name on all the work you hand in.
Write in dark blue or black pen.
You may use an HB pencil for any diagrams or graphs.
Do not use staples, paper clips, glue or correction fluid.
DO **NOT** WRITE IN ANY BARCODES.

Answer **all** questions.
Write your answers in the spaces provided on the Question Paper.

Electronic calculators may be used.
You may lose marks if you do not show your working or if you do not use appropriate units.

At the end of the examination, fasten all your work securely together.
The number of marks is given in brackets [ ] at the end of each question or part question.

This document consists of **11** printed pages and **1** blank page.

DC (CW/CGW) 93932/3
© UCLES 2015

CAMBRIDGE International Examinations

Answer **all** the questions in the spaces provided.

1 Some students wanted to investigate the effect of concentrated fruit juice on potato tissue. Fruit juice contains a lot of sugar.

Five different solutions **A**, **B**, **C**, **D**, and **E** were prepared from concentrated fruit juice and water as shown in Table 1.1.

(a) Complete Table 1.1 by inserting the volumes of fruit juice and water required to prepare solution **B**.

Table 1.1

solution	volume of fruit juice used / cm^3	volume of water used / cm^3	fruit juice concentration / %
A	0	100	0
B			25
C	50	50	50
D	75	25	75
E	100	0	100

[1]

Five pieces of fresh potato were cut to 70 mm in length. One piece was placed in each of the five solutions so that each piece was fully submerged. They were left for 40 minutes and then removed.

Fig. 1.1 shows the appearance of these five pieces of potato after 40 minutes.

solution	pieces of potato in side view
A	
B	
C	
D	
E	

Fig. 1.1

(b) **(i)** Measure the length of each piece of potato in Fig. 1.1 and record your measurements in Table 1.2.

Table 1.2

solution	fruit juice concentration/%	final length of potato piece/mm	change in length of potato piece/mm
A	0		
B	25		
C	50		
D	75		
E	100		

[2]

(ii) Complete the last column in Table 1.2 by recording the change in length of each piece of potato. [3]

(iii) Construct a graph to show the effect of fruit juice concentration on change in length of potato pieces.

Complete the labelling of the axes.

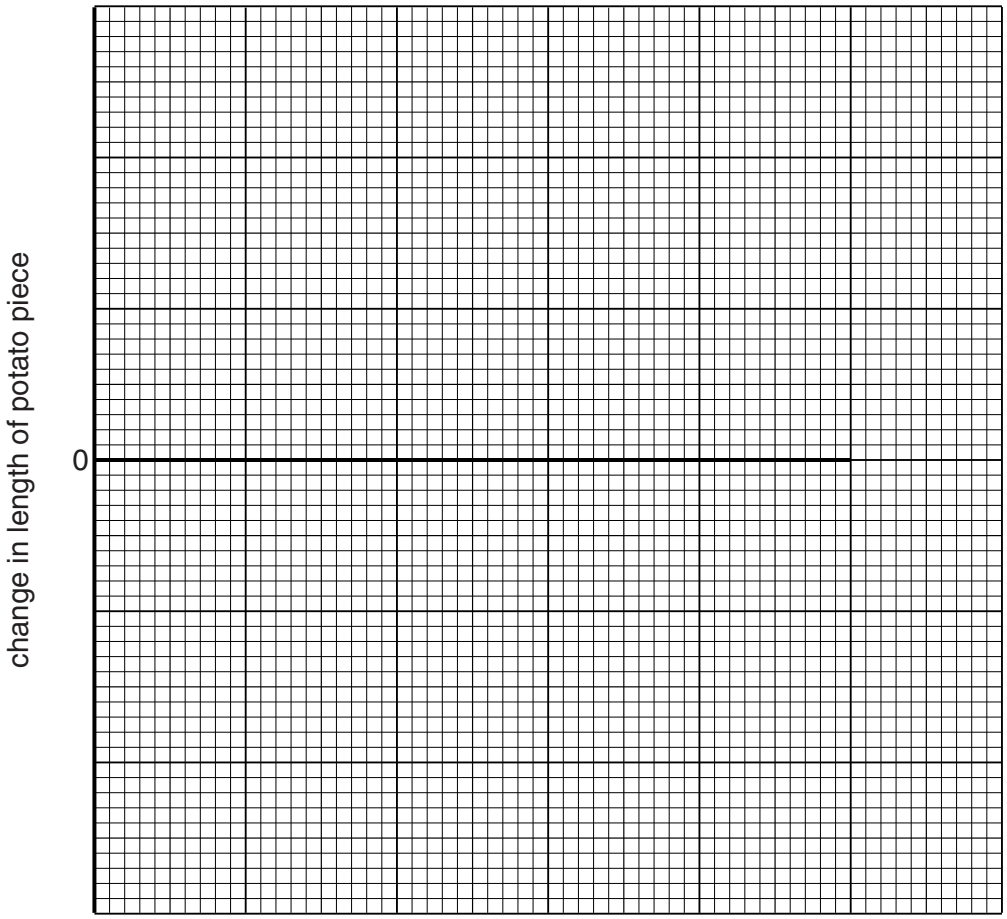

[5]

(iv) Suggest what has happened to the potato pieces in the different solutions that has resulted in their changes in length.

.....

.....

.....

.....

.....

.....

.....

.....

.....

.....

.....

.....[5]

(c) Suggest **two** improvements you could make to the method used for this investigation to improve its reliability.

1 .....

.....

2 .....

.....[2]

[Total: 18]

Question 2 starts on page 6

2 Fig. 2.1 shows a variegated leaf. Variegated leaves have green (dark) and white (pale) areas.

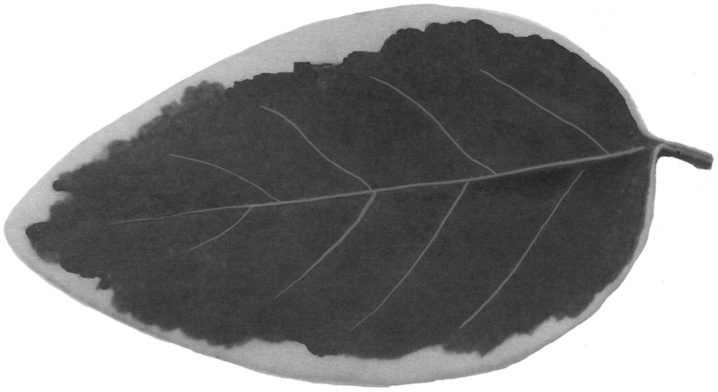

magnification × 0.5

Fig. 2.1

(a) **(i)** Make a large labelled drawing of this leaf.

[4]

(ii) The leaf you have drawn had been exposed to light.

Describe how you could test the leaf safely to show that its green areas contained starch.

.....

.....

.....

.....

.....

.....

.....

.....

.....[4]

(iii) Describe what the green and white areas of the leaf would look like at the end of your test.

green areas .....

.....

white areas .....

.....[2]

Fig. 2.2 shows the lower surface of a similar leaf, as seen with a microscope.

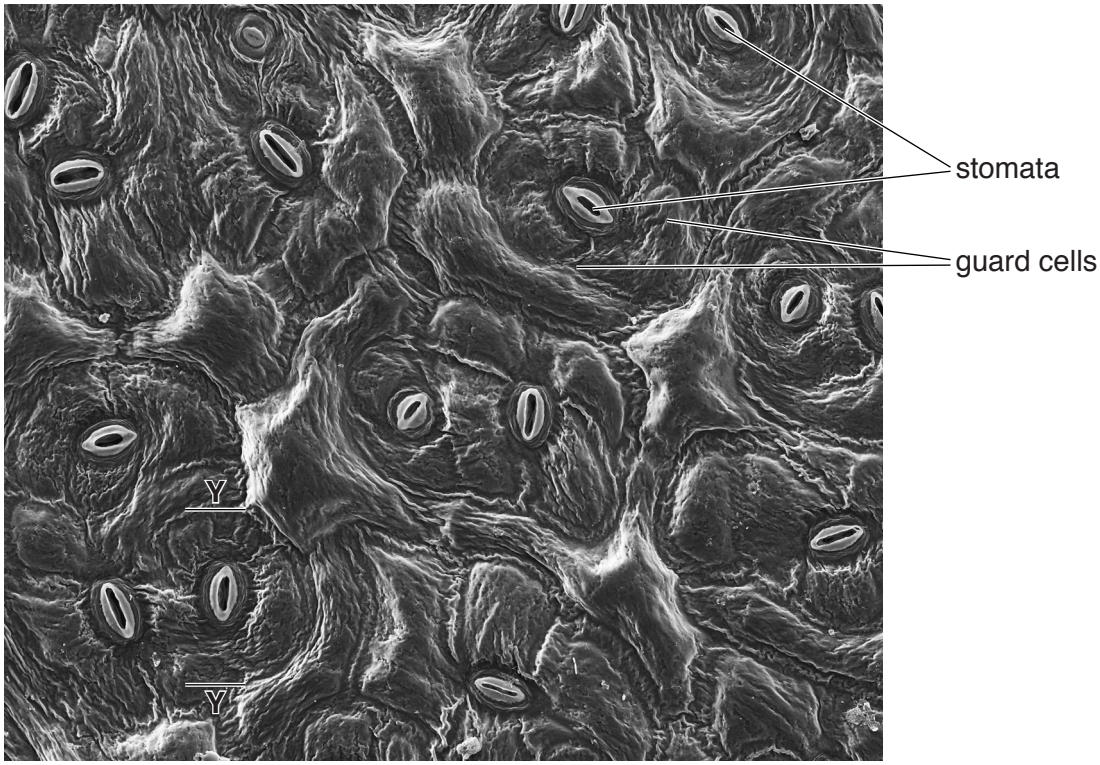

magnification × 500

Fig. 2.2

(b) **(i)** Count the number of stomata present in Fig. 2.2.

..... [1]

(ii) Measure the distance between **Y – Y** as shown on Fig. 2.2.

Length of **Y – Y** – the length of one guard cell .....

Calculate the actual length of this guard cell.

actual length = ...[3]

[Total: 14]

Question 3 starts on page 10

3 Long bones in arms and legs are hollow as shown in Fig. 3.1.

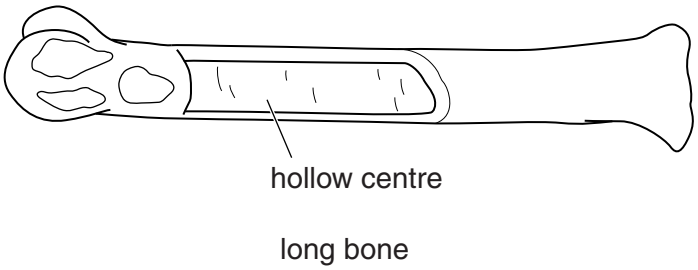

Fig. 3.1

Some students wanted to test their idea that the longest bones were the strongest.

They used a roll of paper to represent a bone and supported it between two stands, as shown in Fig. 3.2. Masses were added to a hook over the 'bone'. More 5 g masses were added until the 'bone' began to bend and the total mass that caused this bending was recorded.

The apparatus is shown in Fig. 3.2.

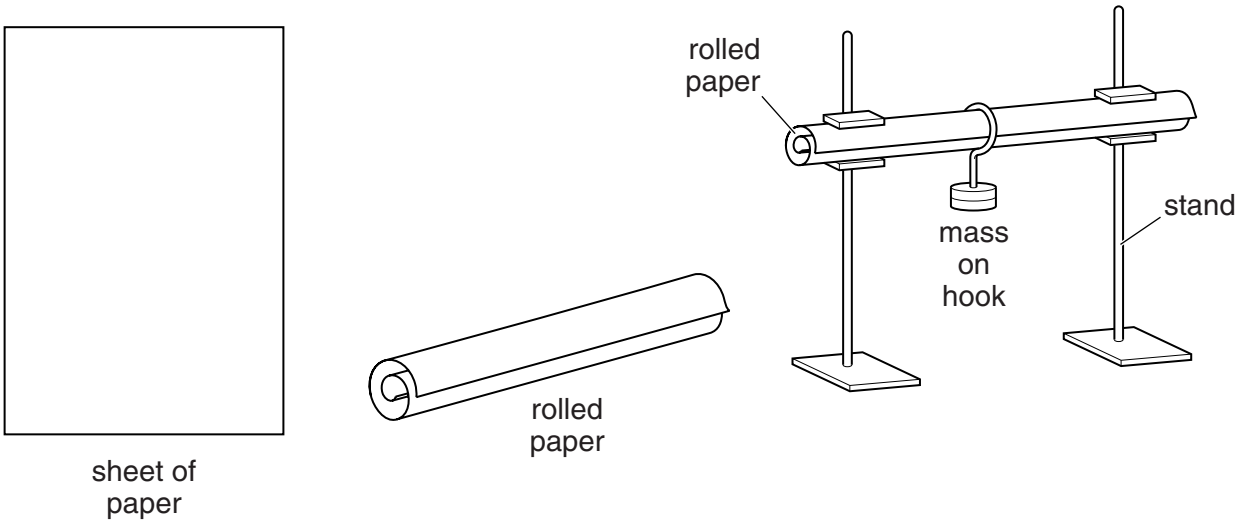

Fig. 3.2

(a) Describe **two** variables that the students would need to keep constant during this investigation.

1 .....

.....

2 .....

.....[2]

Their results are shown in Table 3.1.

Table 3.1

length of 'bone'/cm	mass that caused the bending/g
10	75
20	65
35	50
40	30

(b) **(i)** Describe the trend shown by these results.

.....

.....[1]

(ii) Suggest the conclusion the students reached from their results.

.....

.....[1]

(c) Design an investigation using similar apparatus to find out whether thicker bones are stronger than thin bones.
You should consider the need to obtain reliable results when designing your investigation.

.....

.....

.....

.....

.....

.....

.....

.....

.....

.....

.....

.....[4]

[Total: 8]

BLANK PAGE

Permission to reproduce items where third-party owned material protected by copyright is included has been sought and cleared where possible. Every reasonable effort has been made by the publisher (UCLES) to trace copyright holders, but if any items requiring clearance have unwittingly been included, the publisher will be pleased to make amends at the earliest possible opportunity.

To avoid the issue of disclosure of answer-related information to candidates, all copyright acknowledgements are reproduced online in the Cambridge International Examinations Copyright Acknowledgements Booklet. This is produced for each series of examinations and is freely available to download at www.cie.org.uk after the live examination series.

Cambridge International Examinations is part of the Cambridge Assessment Group. Cambridge Assessment is the brand name of University of Cambridge Local Examinations Syndicate (UCLES), which is itself a department of the University of Cambridge.

© UCLES 2015