Cambridge O Level

Cambridge Assessment International Education
Cambridge Ordinary Level

CANDIDATE NAME	

CENTRE NUMBER						CANDIDATE NUMBER				

2683535496

BIOLOGY **5090/62**

Paper 6 Alternative to Practical **October/November 2019**

1 hour

Candidates answer on the Question Paper.

No Additional Materials are required.

READ THESE INSTRUCTIONS FIRST

Write your centre number, candidate number and name on all the work you hand in.
Write in dark blue or black pen.
You may use an HB pencil for any diagrams or graphs.
Do not use staples, paper clips, glue or correction fluid.
DO **NOT** WRITE IN ANY BARCODES.

Answer **all** questions.
Write your answers in the spaces provided on the Question Paper.

Electronic calculators may be used.
You may lose marks if you do not show your working or if you do not use appropriate units.

At the end of the examination, fasten all your work securely together.
The number of marks is given in brackets [ ] at the end of each question or part question.

This document consists of **10** printed pages and **2** blank pages.

DC (KS/CB) 164659/7
© UCLES 2019

Cambridge Assessment International Education

BLANK PAGE

Answer **all** the questions in the spaces provided.

1 Catalase is an enzyme found in most living organisms. It catalyses the breakdown of hydrogen peroxide to water and oxygen.

$$\text{hydrogen peroxide} \xrightarrow{\text{catalase}} \text{water + oxygen}$$

Potato tissue contains catalase. When a thin disc of potato is dropped into a test-tube containing hydrogen peroxide solution, it first sinks to the bottom. As oxygen is produced, bubbles form on the potato disc that make it float to the surface.

Some students did an experiment to find the activity of potato catalase on different concentrations of hydrogen peroxide solution.

1 mm thick discs were cut from the end of a cylinder of potato tissue as shown in the diagram below.

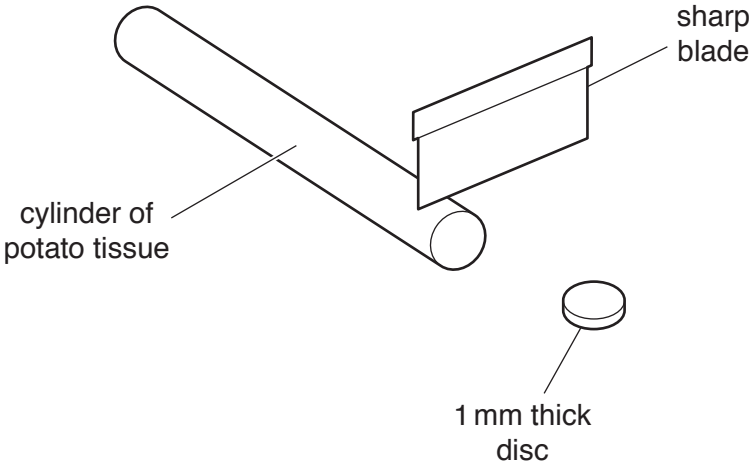

One disc was dropped into a test-tube containing 15 cm^3 of 1% hydrogen peroxide solution. A stop-watch was started immediately and the time taken for the disc to reach the surface of the solution was recorded. The time was rounded to the nearest whole second.

A second disc was then dropped into the test-tube and the time taken for it to reach the surface recorded. This process was repeated with a third disc.

The experiment was then repeated with a test-tube containing 15 cm^3 of 2% hydrogen peroxide solution.

The results are shown in the table below.

The procedure was repeated with a test-tube containing 15 cm^3 of 3% hydrogen peroxide solution.

The times recorded were 8.3, 6.9 and 9.1 seconds.

percentage concentration of hydrogen peroxide solution	time taken for potato disc to reach surface of hydrogen peroxide solution / seconds			
	disc 1	disc 2	disc 3	mean
1	30	26	34	
2	12	14	13	
3				

(a) **(i)** Complete the table by entering the results for 3% hydrogen peroxide solution (rounded to the nearest whole second) and calculating the means. [3]

Hydrogen peroxide is a harmful or irritating substance.

(ii) State **two** precautions you would take when using hydrogen peroxide in an experiment.

1 .....

.....

2 .....

.....
[2]

(iii) State what equipment the students could use to measure 15 cm^3 of hydrogen peroxide solution.

..... [1]

(iv) Describe the effect of increasing the concentration of hydrogen peroxide solution on the time taken for the potato discs to float.

.....

..... [1]

(v) Explain what the students could do to make their results more reliable.

.....

..... [1]

(vi) Suggest **one** possible source of error in the method used in this experiment. Explain why this could have affected the results.

source of error .....

.....

explanation .....

.....
[2]

Another potato disc was dropped into a test-tube containing 15 cm^3 of distilled water. It sank to the bottom of the test-tube.

After 30 minutes it was still at the bottom of the test-tube.

(vii) Explain why the disc did not float.

.....

..... [1]

(b) Describe in detail how you could show that it was an enzyme that caused bubbles to be produced when the potato discs were dropped into hydrogen peroxide solution.

.....

.....

.....

.....

.....

.....

.....

..... [4]

(c) A group of students decided to investigate the effect of increasing the concentration of catalase on the rate of oxygen production. They altered the concentration of the enzyme by using different numbers of 1 mm thick potato discs.

They used the apparatus in the diagram below to collect the oxygen produced by different numbers of potato discs in 30 cm^3 of 3% hydrogen peroxide solution. They recorded how long it took to produce 5 cm^3 of oxygen with each number of discs.

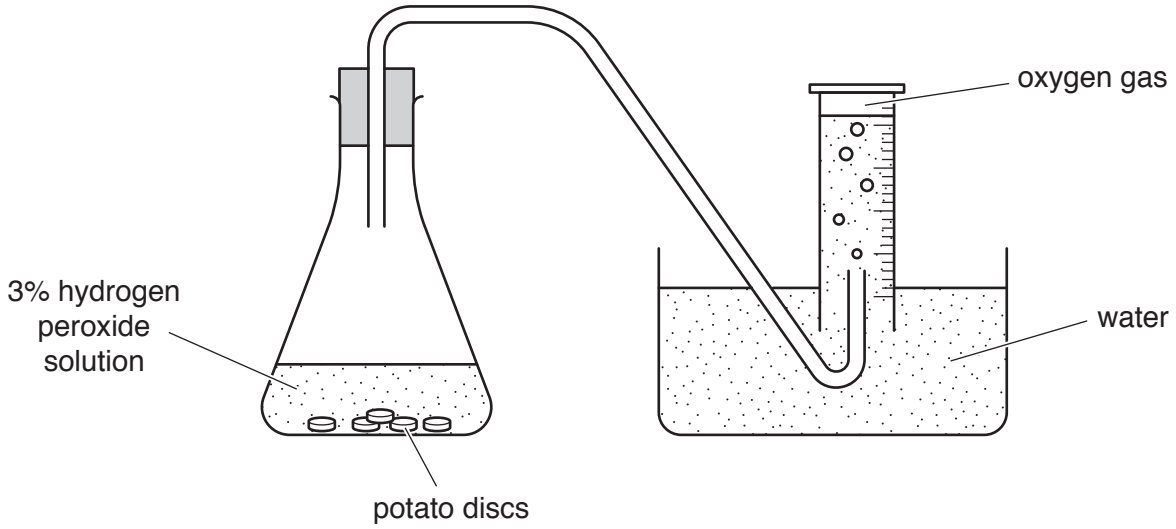

Their results are shown in the table below.

number of potato discs	time to produce 5 cm^3 of oxygen / seconds
1	110
2	46
3	32
4	30
5	30

(i) Construct a line graph of the data in the table on the grid below. Draw a smooth curve through your points.

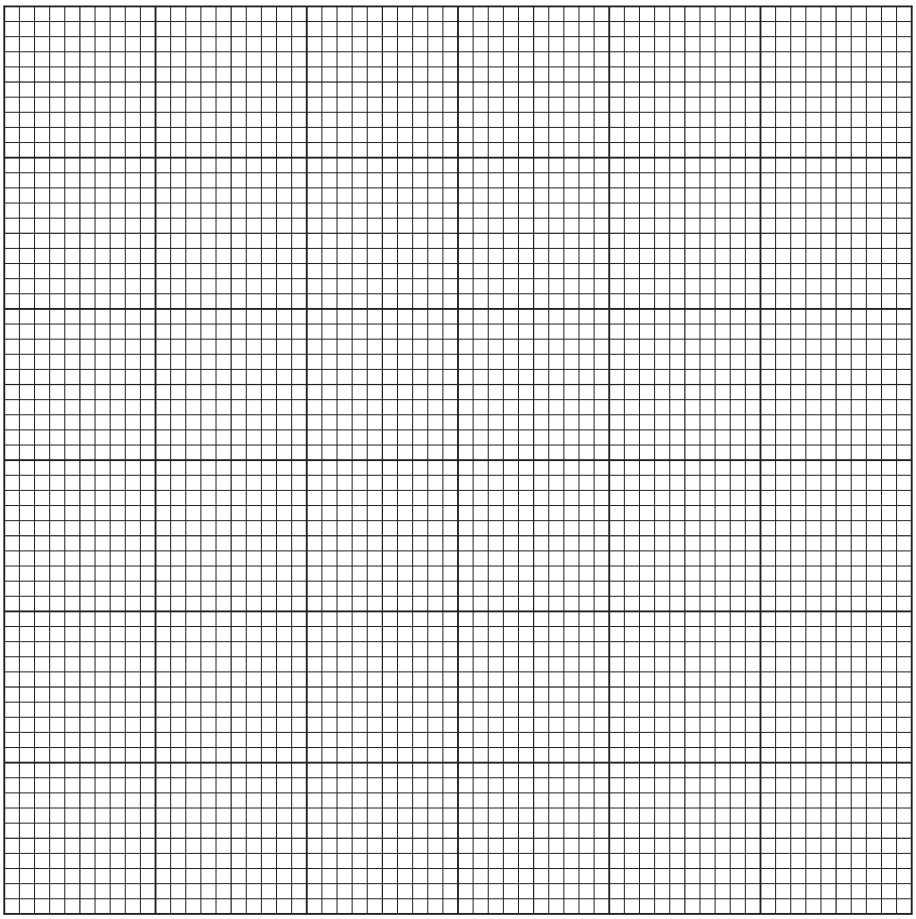

[5]

(ii) Describe the effect of increasing enzyme concentration on the rate of the reaction.

.....

.....

.....

..... [2]

(iii) Suggest an explanation for the shape of the line between 4 and 5 discs of potato.

.....

..... [1]

[Total: 23]

2 Some plants have hollow stems holding their flowers above the ground.

A student cut strips of tissue from a stem as shown in the diagram.

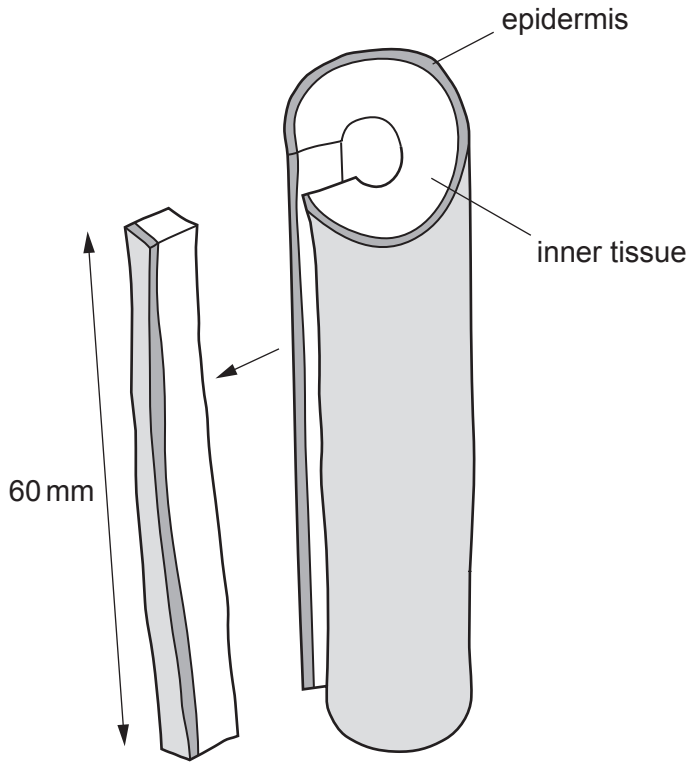

One strip was placed in distilled water (**A**) and one strip was placed in a sugar solution (**B**).

The student recorded his observations by drawing side views of the two strips after 30 minutes. These are shown in the diagrams below.

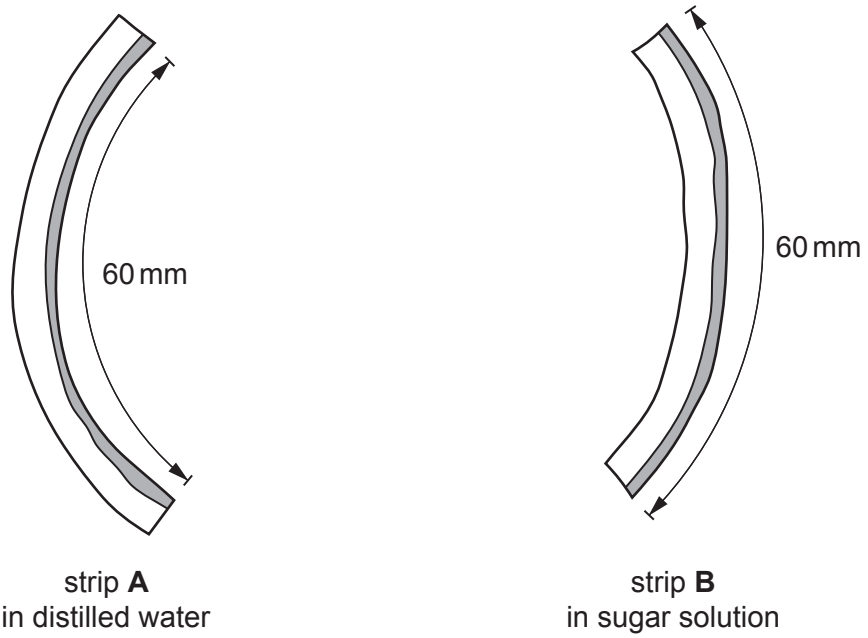

(a) Describe the changes and suggest reasons for them.

.....

.....

.....

.....

.....

.....

.....

..... [5]

(b) Pollen grains can be germinated in a dilute sugar solution. The photograph shows a germinated pollen grain.

magnification ×600

(i) Make a large drawing of this germinated pollen grain in the space below.

[4]

(ii) Measure the length of the pollen tube between lines **C** and **D** on the photograph.

..... mm

Calculate the actual length of the pollen tube and show your working.

..... [3]

[Total: 12]

© UCLES 2019

3 The leaf-cutter bee cuts and removes sections of plant leaves to make its nest.

The diagram below shows one leaf with a section cut out, placed on a grid.

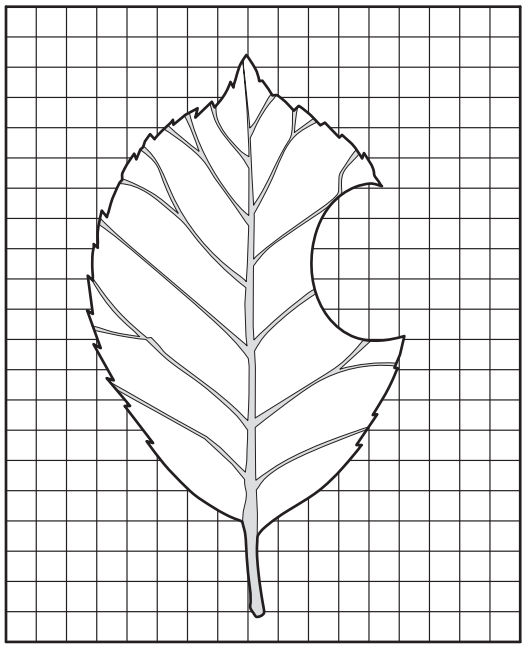

(a) Explain how you would calculate the area of leaf that has been removed.

.....

.....

.....

..... [2]

(b) Calculate the area of leaf that has been removed. Each square has an area of 16 mm^2.

Show your working.

..... [3]

[Total: 5]

BLANK PAGE

Permission to reproduce items where third-party owned material protected by copyright is included has been sought and cleared where possible. Every reasonable effort has been made by the publisher (UCLES) to trace copyright holders, but if any items requiring clearance have unwittingly been included, the publisher will be pleased to make amends at the earliest possible opportunity.

To avoid the issue of disclosure of answer-related information to candidates, all copyright acknowledgements are reproduced online in the Cambridge Assessment International Education Copyright Acknowledgements Booklet. This is produced for each series of examinations and is freely available to download at www.cambridgeinternational.org after the live examination series.

Cambridge Assessment International Education is part of the Cambridge Assessment Group. Cambridge Assessment is the brand name of the University of Cambridge Local Examinations Syndicate (UCLES), which itself is a department of the University of Cambridge.

© UCLES 2019