Cambridge O Level

**Cambridge Assessment International Education**
Cambridge Ordinary Level

| CANDIDATE NAME | |
|---|---|

| CENTRE NUMBER | | | | | | CANDIDATE NUMBER | | | | |
|---|---|---|---|---|---|---|---|---|---|---|

*4181704630*

**BIOLOGY** **5090/32**

Paper 3 Practical Test **October/November 2019**

**1 hour 15 minutes**

Candidates answer on the Question Paper.

Additional Materials: As specified in the Confidential Instructions.

**READ THESE INSTRUCTIONS FIRST**

Write your centre number, candidate number and name on all the work you hand in.
Write in dark blue or black pen.
You may use an HB pencil for any diagrams or graphs.
Do not use staples, paper clips, glue or correction fluid.
DO **NOT** WRITE IN ANY BARCODES.

Answer **all** questions.
Write your answers in the spaces provided on the Question Paper.

Electronic calculators may be used.
You may lose marks if you do not show your working or if you do not use appropriate units.

At the end of the examination, fasten all your work securely together.
The number of marks is given in brackets [ ] at the end of each question or part question.

| For Examiner's Use | |
|---|---|
| 1 | |
| 2 | |
| Total | |

This document consists of **11** printed pages and **1** blank page.

DC (KS/CB) 164657/7
© UCLES 2019

Cambridge Assessment International Education

[Turn over

**In order to plan the best use of your time, read through all the questions on this paper carefully before starting work.**

**1** Catalase is an enzyme found in most living organisms. It catalyses the breakdown of hydrogen peroxide to water and oxygen.

$$\text{hydrogen peroxide} \xrightarrow{\text{catalase}} \text{water + oxygen}$$

Potato tissue contains catalase. When a thin disc of potato is dropped into a test-tube containing hydrogen peroxide solution, it first sinks to the bottom. As oxygen is produced, bubbles form on the potato disc that make it float to the surface.

You are going to do an experiment to find the activity of potato catalase on different concentrations of hydrogen peroxide solution.

**Hydrogen peroxide is harmful and an irritant and may cause damage to eyes and skin. Wear eye protection while doing the experiment.**

You are provided with four large test-tubes:

- one containing 15 $cm^3$ of 3% hydrogen peroxide solution
- one containing 15 $cm^3$ of 2% hydrogen peroxide solution
- one containing 15 $cm^3$ of 1% hydrogen peroxide solution
- one empty test-tube

and a cylinder of potato tissue.

- Label the empty test-tube **0%**.
- Measure and add 15 $cm^3$ of distilled water to this test-tube.

- Cut a section of potato tissue approximately 3 mm thick from one end of the cylinder of potato tissue. You will not need to use this.

- Cut a disc **1 mm** thick from the same end of the cylinder of potato as shown in the diagram below.

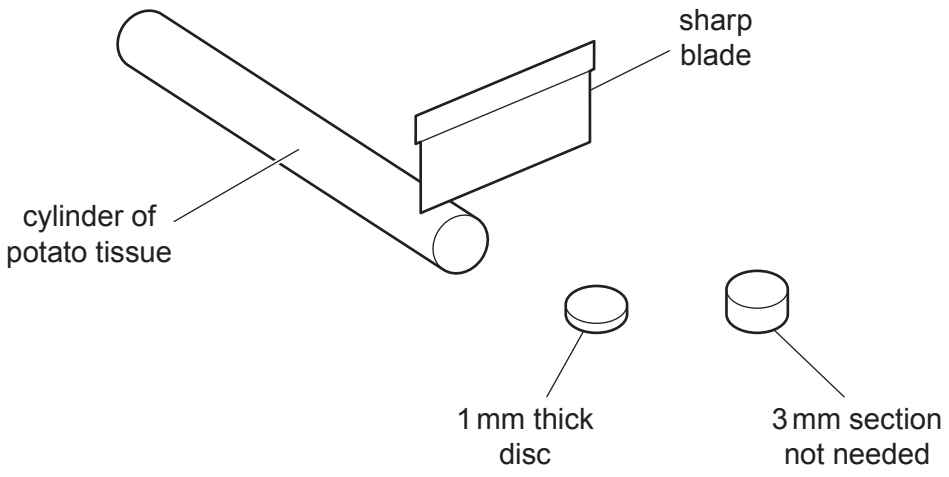


- Use forceps to pick up the 1 mm disc and drop it into the test-tube labelled **0%**. The disc will sink to the bottom of the test-tube.

Note the time .....

**(a)** **(i)** You are going to use the second-hand on a clock, or a stop-watch, to time how long it takes for a disc to float to the surface when placed in hydrogen peroxide solution.

- Cut another potato disc 1 mm thick.

- Drop the disc into the test-tube containing **1%** hydrogen peroxide solution and immediately start timing.

- Stop timing when the disc reaches the surface of the hydrogen peroxide solution.

  start time .....

  end time .....

  time taken for disc to reach the surface ..... seconds

- Do not remove the disc from the test-tube.

- Cut another fresh disc of potato tissue 1 mm thick and drop it into the 1% hydrogen peroxide solution. Immediately start timing. Stop timing when the disc reaches the surface of the hydrogen peroxide solution.

  start time .....

  end time .....

  time taken for disc to reach the surface ..... seconds

- Repeat this procedure with another fresh 1 mm disc of potato, recording results as before.

  start time .....

  end time .....

  time taken for disc to reach the surface ..... seconds

[2]

**(ii)** Enter the times taken for the discs to reach the surface and the mean time in the table below.

| percentage concentration of hydrogen peroxide solution | time taken for potato disc to reach the surface of the hydrogen peroxide solution / seconds | | | |
|---|---|---|---|---|
| | disc 1 | disc 2 | disc 3 | mean |
| 1 | | | | |
| 2 | | | | |
| 3 | | | | |

[4]

- Repeat this full procedure with three freshly cut 1 mm discs of potato in **2%** hydrogen peroxide solution, recording your results and the mean in the table.
  Space is provided below for you to record times.

- Repeat this full procedure with three freshly cut 1 mm discs of potato in **3%** hydrogen peroxide solution, recording your results and the mean in the table.
  Space is provided below for you to record times.

**(iii)** Describe the effect of increasing the concentration of hydrogen peroxide solution on the time taken for the potato discs to reach the surface.

.....

..... [1]

**(iv)** Explain what you would do to make the mean results more reliable.

.....

..... [1]

**(v)** Suggest **two** possible sources of error in the method used in this experiment. Explain why each could have affected the results.

source of error 1 .....

.....

explanation .....

.....

source of error 2 .....

.....

explanation .....

.....
[4]

**(vi)** Observe the potato disc in the test-tube labelled **0%**.

start time .....

end time .....

Calculate how long the potato disc has been in the solution.

..... minutes

State and explain the position of the potato disc in the test-tube.

position .....

explanation .....

.....

.....

.....
[3]

**(b)** Describe in detail how you could show that it was an enzyme that caused bubbles to be produced when the potato discs were dropped into hydrogen peroxide solution.

.....

.....

.....

.....

.....

.....

.....

..... [3]

**(c)** A group of students decided to investigate the effect of increasing the concentration of catalase on the rate of oxygen production. They altered the concentration of the enzyme by using different numbers of 1 mm thick potato discs.

They used the apparatus in the diagram below to collect the oxygen produced by different numbers of potato discs in 30 $cm^3$ of 3% hydrogen peroxide solution. They recorded how long it took to produce 5 $cm^3$ of oxygen with each number of discs.

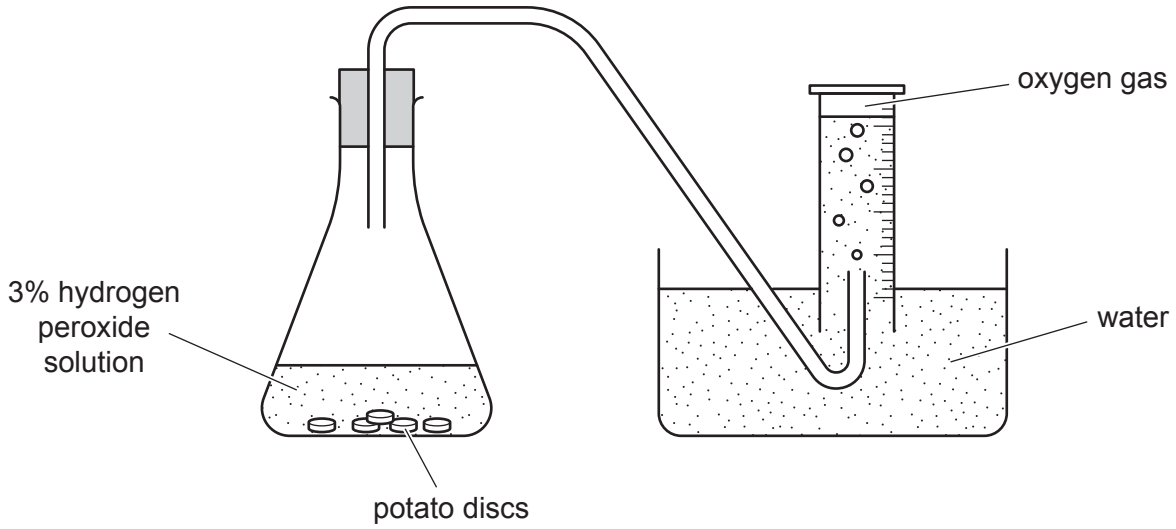

Their results are shown in the table below.

| number of potato discs | time to produce 5 $cm^3$ of oxygen / seconds |
|---|---|
| 1 | 110 |
| 2 | 46 |
| 3 | 32 |
| 4 | 30 |
| 5 | 30 |

**(i)** Construct a line graph of the data in the table on the grid below. Draw a smooth curve through your points.

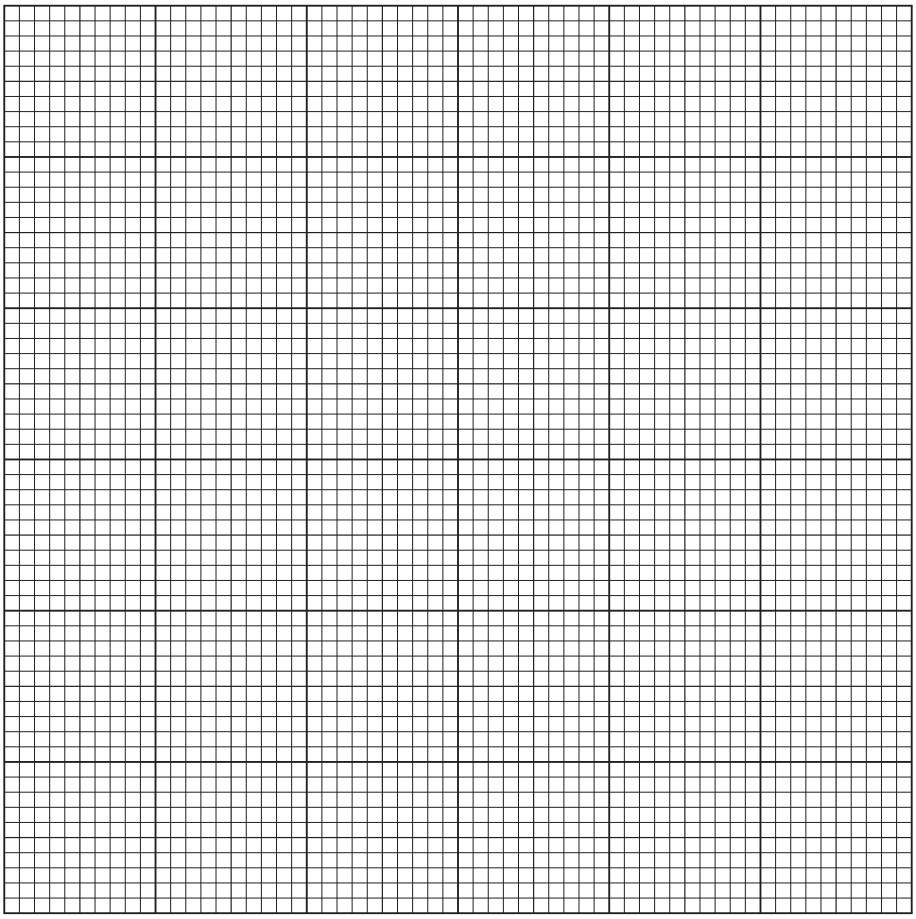

[5]

**(ii)** Describe the effect of increasing enzyme concentration on the rate of the reaction.

.....

.....

.....

..... [2]

**(iii)** Suggest an explanation for the shape of the line between 4 and 5 discs of potato.

.....

..... [1]

[Total: 26]

**2** Some plants have hollow stems holding their flowers above the ground.

A student cut strips of tissue from a stem as shown in the diagram.

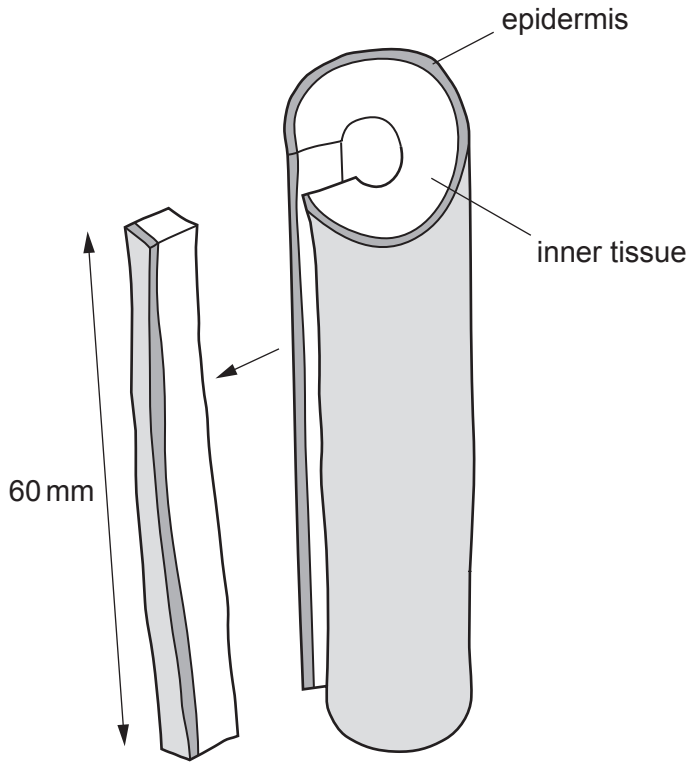


One strip was placed in distilled water (**A**) and one strip was placed in a sugar solution (**B**).

The student recorded his observations by drawing side views of the two strips after 30 minutes. These are shown in the diagrams below.

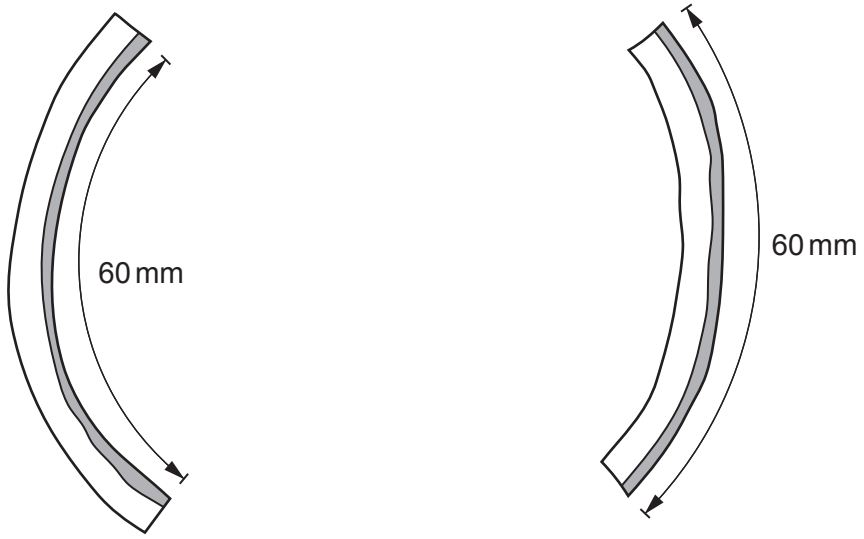


strip **A**
in distilled water

strip **B**
in sugar solution

**(a)** Describe the changes and suggest reasons for them.

.....

.....

.....

.....

.....

.....

.....

..... [5]

**(b)** The photograph shows two flowers.

**(i)** Describe the appearance of the stigma.

.....

..... [1]

**(ii)** Suggest a reason for the shape of the stigma.

.....

..... [1]

**(c)** Pollen grains can be germinated in a dilute sugar solution. The photograph shows a germinated pollen grain.

magnification ×600

**(i)** Make a large drawing of this germinated pollen grain in the space below.

[4]

**(ii)** Measure the length of the pollen tube between lines **C** and **D** on the photograph.

..... mm

Calculate the actual length of the pollen tube and show your working.

..... [3]

[Total: 14]

© UCLES 2019

**BLANK PAGE**

Permission to reproduce items where third-party owned material protected by copyright is included has been sought and cleared where possible. Every reasonable effort has been made by the publisher (UCLES) to trace copyright holders, but if any items requiring clearance have unwittingly been included, the publisher will be pleased to make amends at the earliest possible opportunity.

To avoid the issue of disclosure of answer-related information to candidates, all copyright acknowledgements are reproduced online in the Cambridge Assessment International Education Copyright Acknowledgements Booklet. This is produced for each series of examinations and is freely available to download at www.cambridgeinternational.org after the live examination series.

Cambridge Assessment International Education is part of the Cambridge Assessment Group. Cambridge Assessment is the brand name of the University of Cambridge Local Examinations Syndicate (UCLES), which itself is a department of the University of Cambridge.

© UCLES 2019