Cambridge O Level

Cambridge Assessment International Education
Cambridge Ordinary Level

CANDIDATE NAME	

CENTRE NUMBER						CANDIDATE NUMBER				

2662065863

BIOLOGY **5090/21**

Paper 2 Theory **October/November 2019**

1 hour 45 minutes

Candidates answer on the Question Paper.

No Additional Materials are required.

READ THESE INSTRUCTIONS FIRST

Write your centre number, candidate number and name on all the work you hand in.
Write in dark blue or black pen.
You may use an HB pencil for any diagrams or graphs.
Do not use staples, paper clips, glue or correction fluid.
DO **NOT** WRITE IN ANY BARCODES.

Section A
Answer **all** questions in this section.
Write your answers in the spaces provided on the Question Paper.

Section B
Answer **both** questions in this section.
Write your answers in the spaces provided on the Question Paper.

Section C
Answer **either** question 8 **or** question 9.
Write your answers in the spaces provided on the Question Paper.

You are advised to spend no longer than one hour on Section A.

Electronic calculators may be used.
You may lose marks if you do not show your working or if you do not use appropriate units.

At the end of the examination, fasten all your work securely together.
The number of marks is given in brackets [ ] at the end of each question or part question.

This document consists of **12** printed pages.

DC (ST/CT) 165366/4
© UCLES 2019

Cambridge Assessment International Education

Section A

Answer **all** questions in this section.

Write your answers in the spaces provided.

1 The table shows some of the components found in 100 cm^3 of cow's milk, breast milk and breast milk substitute (formula milk).

component	cow's milk	breast milk	breast milk substitute
protein / g	3.3	1.2	1.3
sugar / g	4.2	6.4	7.0
fat / g	3.0	4.0	1.4
calcium / mg	120.0	120.0	49.0
iron / mg	0.1	0.1	0.5
vitamin C / mg	1.0	2.0	8.3
vitamin D / μg	20.0	200.0	1.2

(a) Name **two** main components of a normal healthy diet that do **not** appear in the table.

1 .....

2 .....
[2]

(b) State which type of milk would be **least** likely to ensure the development of healthy bones and teeth, and explain your answer.

type of milk .....

explanation .....

.....

.....
[3]

(c) State which type of milk would provide a baby with the greatest amount of energy.
Give your reasons.

type of milk .....

reasons .....

.....

.....
[3]

© UCLES 2019

(d) Suggest why babies fed on breast milk may have more resistance to disease than those fed on any other type of milk.

.....

.....

.....

..... [2]

[Total: 10]

2 The diagram shows the structure of a virus.

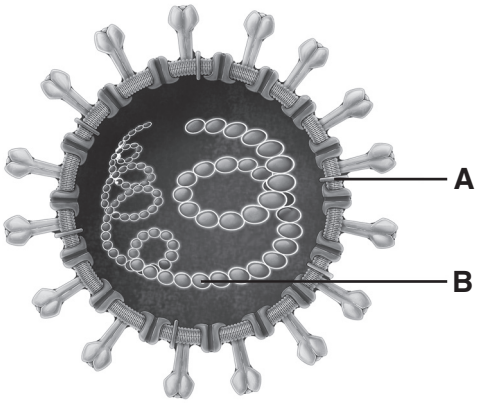

(a) Identify the structures labelled **A** and **B** on the diagram.

A .....

B ..... [2]

(b) Name a disease caused by

a virus .....

a bacterium .....
[2]

(c) **(i)** State **two** characteristics of bacteria that are **not** characteristics of viruses.

1 .....

2 .....
[2]

(ii) State **one** structural feature **absent** in a bacterial cell that is always present in a plant cell.

..... [1]

(d) The diagram shows how the structural features found in plant cells and in animal cells can be grouped together.

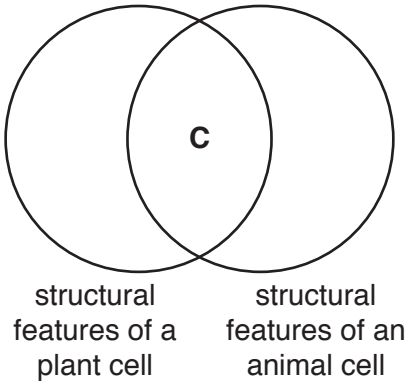

List **three** features that would be grouped in region **C** on the diagram.

1 .....

2 .....

3 .....
[3]

[Total: 10]

3 The graph shows the rates of water loss for three plants, **D**, **E** and **F**, during the first 14 minutes of an experiment. The plants are of different species and are growing in identical conditions.

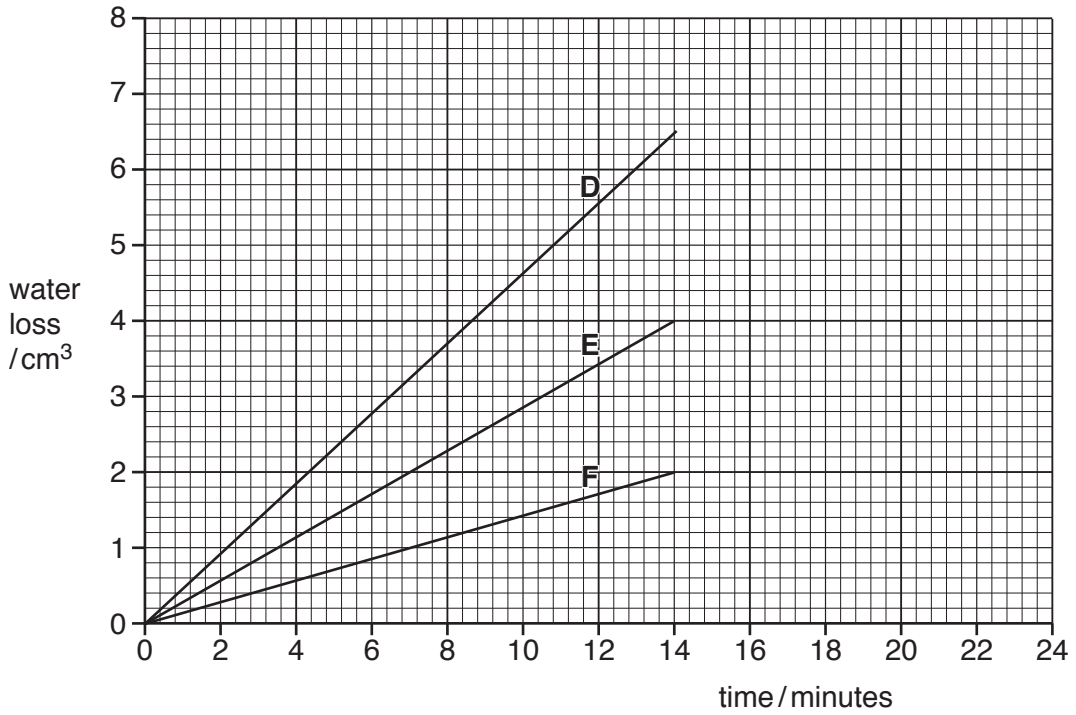

(a) Name the process by which plants lose water to the atmosphere.

..... [1]

(b) Suggest **three** reasons for the differences in rates of water loss shown by the three plant species.

1 .....

2 .....

3 .....
[3]

(c) In the experiment, after 14 minutes, air is blown across plant **E** for 2 minutes and a black bag is placed over plant **F** for the remaining 10 minutes.

(i) Continue the lines on the graph to show what would happen to the rates of water loss for plants **E** and **F**. [2]

(ii) Explain the shape of each line you have drawn.

plant **E** .....

.....

.....

plant **F** .....

.....

.....
[5]

[Total: 11]

© UCLES 2019

4 **(a)** Some people find that certain vegetables, such as Brussels sprouts, taste bitter and are unpleasant to eat. Scientists believe that one dominant allele (**T**) of a particular gene gives people the ability to detect the bitter taste.

Two parents find that Brussels sprouts taste bitter. In the space below, draw a genetic diagram to show how these parents can have a child who does **not** find that Brussels sprouts taste bitter.

[5]

(b) Genes are also important in the clotting of blood. Blood will clot normally if a person possesses at least one dominant allele (**B**). This gene is carried only on the X chromosome.

Suggest why more males than females are likely to suffer from a disease in which blood does **not** clot normally.

.....

.....

.....

.....

..... [4]

[Total: 9]

5 The diagrams show a model used to demonstrate the process of human breathing. Diagram **G** shows the model after breathing in, and diagram **H** after breathing out.

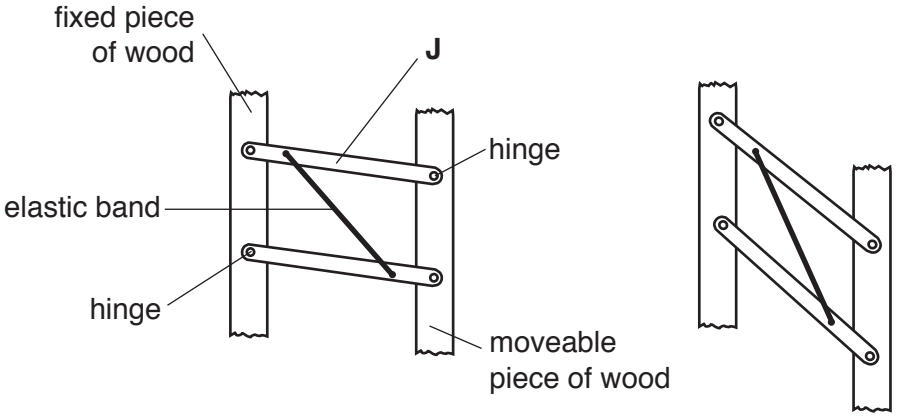

G **H**

(a) **(i)** Name the structure in the human body represented by **J** in the model.

..... [1]

(ii) Name the structure in the human body represented by the elastic band. State the action of this structure during the process of breathing **out**.

structure .....

action .....

.....
[3]

(b) Name a muscle that is used in human breathing, but is **not** represented in the model.

State the action of this muscle during the process of breathing **out**.

muscle .....

action .....

.....
[3]

(c) Describe and explain the effect of increasing the volume of the thorax on the movement of air during human breathing.

.....

.....

.....

.....

..... [3]

[Total: 10]

© UCLES 2019

Section B

Answer **both** questions in this section.

Write your answers in the spaces provided.

6 The diagrams show a man fishing.

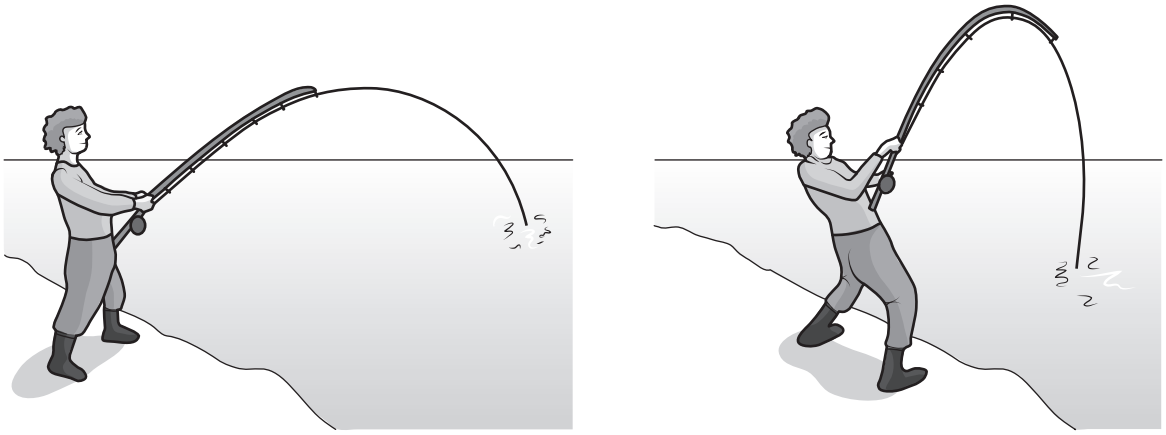

K **L**

(a) In diagram **K**, his fishing rod bends downwards when he catches a fish. Explain how his nervous system is made aware that the rod is bending.

.....

.....

.....

.....

.....

..... [5]

(b) Diagram **L** shows him raising the rod further after catching the fish.

Explain how **named** structures in his right arm have caused the arm to bend in the way shown.

.....

.....

.....

.....

.....

..... [5]

[Total: 10]

7 **(a)** Explain how energy from the Sun can eventually be used for active transport in the alimentary canal.

.....

.....

.....

.....

.....

.....

.....

.....

.....

.....

.....

..... [7]

(b) Solar energy is increasingly being used to replace fossil fuels to generate electricity. Explain the **disadvantages** of continuing to use fossil fuels to generate electricity.

.....

.....

.....

.....

..... [3]

[Total: 10]

© UCLES 2019

Section C

Answer **either** question 8 **or** question 9.

Write your answers in the spaces provided.

8 **(a)** Describe and explain how a protein molecule that is eaten becomes molecules of urea that are excreted.

.....

.....

.....

.....

.....

.....

.....

.....

.....

.....

.....

.....

..... [8]

(b) Explain why carbon dioxide does not normally pass out of the leaves of a plant during the day.

.....

.....

..... [2]

[Total: 10]

9 **(a)** Describe and explain how a nitrate ion in the soil becomes part of a stored molecule in the seed of a plant.

.....

.....

.....

.....

.....

.....

.....

.....

.....

.....

.....

.....

..... [8]

(b) Explain why water is essential for the process of seed germination.

.....

.....

..... [2]

[Total: 10]

Permission to reproduce items where third-party owned material protected by copyright is included has been sought and cleared where possible. Every reasonable effort has been made by the publisher (UCLES) to trace copyright holders, but if any items requiring clearance have unwittingly been included, the publisher will be pleased to make amends at the earliest possible opportunity.

To avoid the issue of disclosure of answer-related information to candidates, all copyright acknowledgements are reproduced online in the Cambridge Assessment International Education Copyright Acknowledgements Booklet. This is produced for each series of examinations and is freely available to download at www.cambridgeinternational.org after the live examination series.

Cambridge Assessment International Education is part of the Cambridge Assessment Group. Cambridge Assessment is the brand name of the University of Cambridge Local Examinations Syndicate (UCLES), which itself is a department of the University of Cambridge.

© UCLES 2019