Cambridge Assessment International Education

Cambridge O Level

CANDIDATE NAME	

CENTRE NUMBER						CANDIDATE NUMBER				

8956021831

BIOLOGY **5090/61**

Paper 6 Alternative to Practical **May/June 2020**

1 hour

You must answer on the question paper.

No additional materials are needed.

INSTRUCTIONS

- Answer **all** questions.
- Use a black or dark blue pen. You may use an HB pencil for any diagrams or graphs.
- Write your name, centre number and candidate number in the boxes at the top of the page.
- Write your answer to each question in the space provided.
- Do **not** use an erasable pen or correction fluid.
- Do **not** write on any bar codes.
- You may use a calculator.
- You should show all your working and use appropriate units.

INFORMATION

- The total mark for this paper is 40.
- The number of marks for each question or part question is shown in brackets [ ].

This document has **12** pages. Blank pages are indicated.

DC (CE/TP) 179856/4
© UCLES 2020

Answer **all** questions in the spaces provided.

1 A student used the apparatus shown below to investigate respiration in some small insects.

The apparatus was sealed with a clip so that any changes in the volume of gas in the apparatus caused the bubble of coloured liquid in the capillary tube to move.

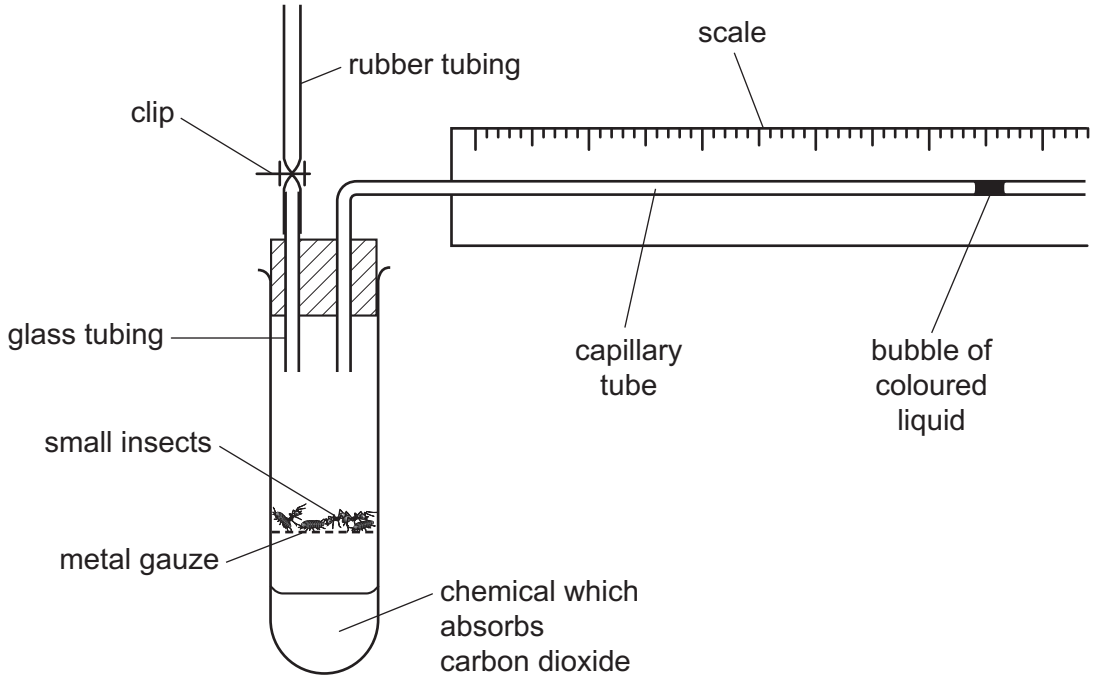

(a) **(i)** Suggest what happens to the bubble of coloured liquid as the insects in the test-tube respire.

..... [1]

Using the apparatus in the diagram, the student read the starting position of the bubble of coloured liquid. She recorded the reading from the **left edge** of the bubble. She left the apparatus for 60 minutes and then recorded the final position of the bubble.

(ii) The diagrams show the starting and final positions of the bubble. In the spaces provided, record the reading for the position of each bubble.

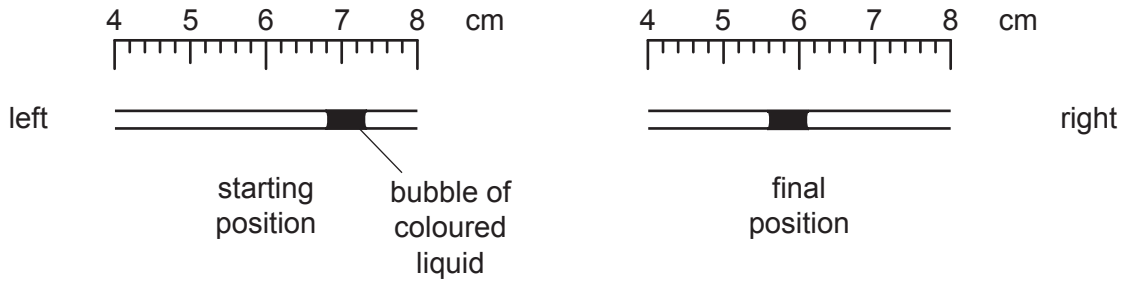

start ..... after 60 minutes ..... [2]

(iii) Calculate the distance the bubble moved in 60 minutes.

..... [2]

(iv) Calculate the rate of movement of the bubble in mm per minute.

Space for working.

rate of movement of bubble ..... mm per minute [2]

(b) (i) Explain why carrying out the experiment several times would improve the reliability of the results.

.....

.....

..... [2]

(ii) Suggest a suitable control experiment for this investigation.

.....

..... [1]

(c) (i) Suggest an environmental factor outside the apparatus that might affect what happens to the bubble of coloured liquid.

..... [1]

(ii) Describe how the student might ensure that this factor has no effect on the bubble of coloured liquid.

.....

..... [1]

(d) (i) The insects produce carbon dioxide as a result of respiration. Suggest and explain what would happen to the bubble of coloured liquid if the experiment was repeated with the chemical which absorbs carbon dioxide removed from the apparatus.

.....

.....

.....

..... [2]

The student wanted to show that the insects produce carbon dioxide.

The diagram shows the apparatus she used.

When carbon dioxide is bubbled through limewater, it turns from clear to cloudy.

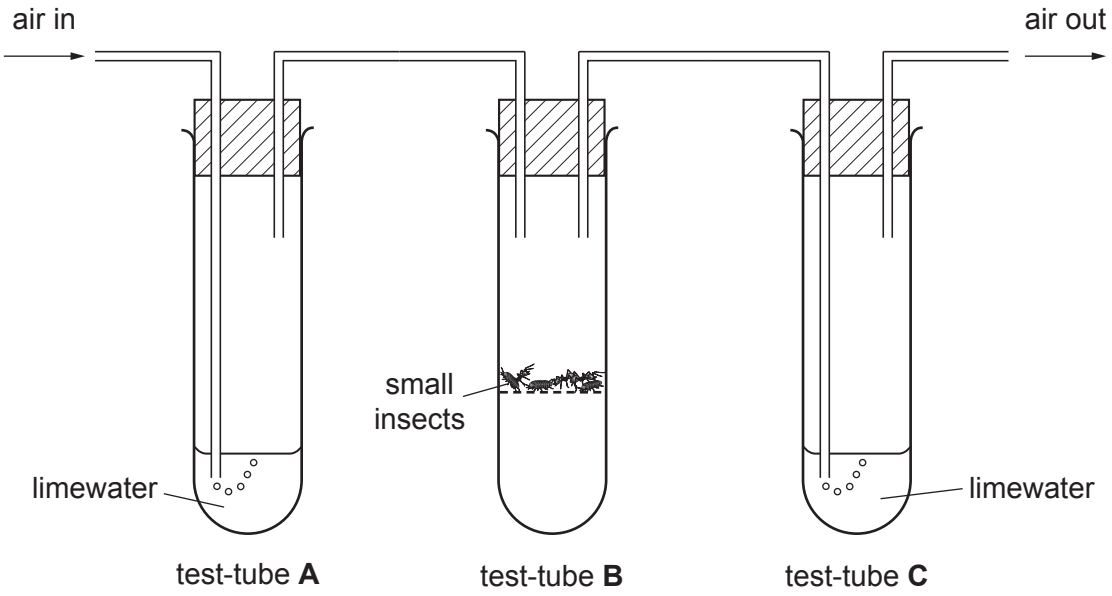

(ii) Suggest and explain the results you would expect after the apparatus was left for 30 minutes.

.....

.....

.....

.....

.....

..... [3]

[Total: 17]

Question 2 starts on page 6.

2 The photograph shows the cut surface of a lemon fruit.

(a) In the space below, make a large drawing of the cut surface of the lemon as it appears in the photograph. [4]

(b) **(i)** **On the photograph**, draw a straight line between **A** and **B**.

Measure and record the length of this line.

..... mm [2]

(ii) On the actual lemon that was photographed, the measurement between **A** and **B** is 6 cm. Use your measurement in **(b)(i)** to calculate the magnification of the lemon in the photograph.

Space for working.

magnification × ..... [3]

(c) A student tested some juice from the lemon for the presence of reducing sugar and protein.

(i) Name the testing reagents she used for these tests.

reducing sugar .....

protein .....
[2]

(ii) State an approximate temperature at which each test should be done.

reducing sugar test .....

protein test .....
[2]

(iii) From the results of her tests the student concluded that reducing sugar was present in the lemon juice but protein was not present. State the results she observed for the tests that helped her to come to this conclusion.

reducing sugar test .....

.....

protein test .....

.....
[2]

(iv) The student then tested the lemon juice for the presence of fats. Explain why she ensured there were no naked flames in the laboratory when she did this.

.....

..... [2]

(d) Another student investigated the concentration of reducing sugar in lemon juice using a different method.

First he tested solutions of different concentrations of the reducing sugar glucose. He used an instrument called a colorimeter to measure the concentration of glucose.

The lower the number on the colorimeter reading, the higher the glucose concentration.

His results are shown in the table.

glucose concentration (%)	colorimeter reading / arbitrary units
0.0	0.95
0.5	0.71
1.0	0.48
1.5	0.24
2.0	0.00

(i) On the grid, construct a line graph to show the relationship between glucose concentration and colorimeter readings.

Join your points with a ruled straight line. [4]

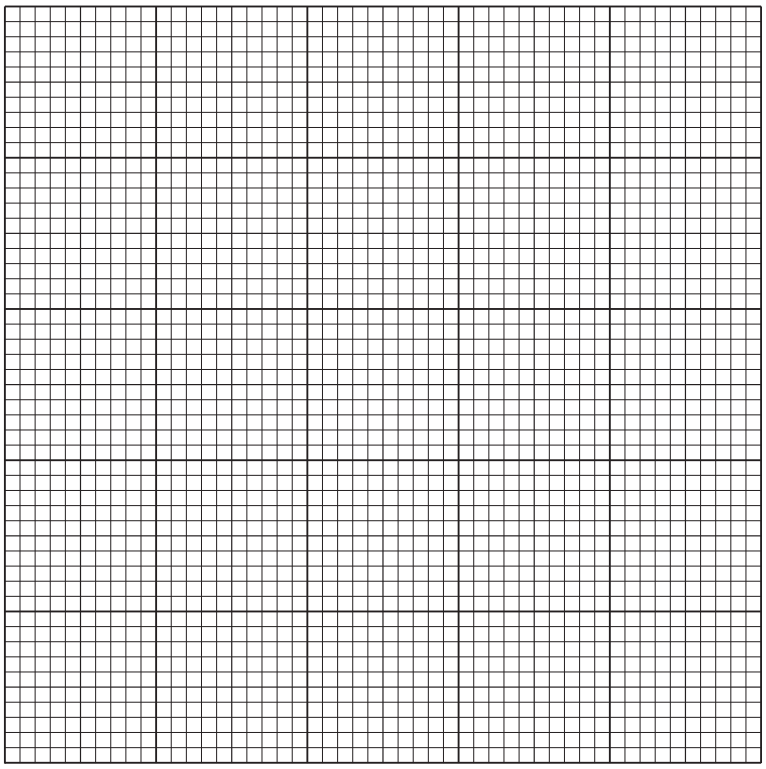

(ii) The student then tested some lemon juice and obtained a colorimeter reading of 0.65 arbitrary units.

Use your graph to find the concentration of glucose in this lemon juice.

Show your working on your graph.

.....% [2]

[Total: 23]

BLANK PAGE

BLANK PAGE

BLANK PAGE

Permission to reproduce items where third-party owned material protected by copyright is included has been sought and cleared where possible. Every reasonable effort has been made by the publisher (UCLES) to trace copyright holders, but if any items requiring clearance have unwittingly been included, the publisher will be pleased to make amends at the earliest possible opportunity.

To avoid the issue of disclosure of answer-related information to candidates, all copyright acknowledgements are reproduced online in the Cambridge Assessment International Education Copyright Acknowledgements Booklet. This is produced for each series of examinations and is freely available to download at www.cambridgeinternational.org after the live examination series.

Cambridge Assessment International Education is part of the Cambridge Assessment Group. Cambridge Assessment is the brand name of the University of Cambridge Local Examinations Syndicate (UCLES), which itself is a department of the University of Cambridge.

© UCLES 2020