* 0000800000001 *

Cambridge Assessment International Education

Cambridge International AS & A Level

CANDIDATE NAME	

CENTRE NUMBER						CANDIDATE NUMBER				

* 2 2 2 2 2 1 4 8 3 4 *

CHEMISTRY **9701/52**

Paper 5 Planning, Analysis and Evaluation **May/June 2025**

1 hour 15 minutes

You must answer on the question paper.

No additional materials are needed.

INSTRUCTIONS

- Answer **all** questions.
- Use a black or dark blue pen. You may use an HB pencil for any diagrams or graphs.
- Write your name, centre number and candidate number in the boxes at the top of the page.
- Write your answer to each question in the space provided.
- Do **not** use an erasable pen or correction fluid.
- Do **not** write on any bar codes.
- You may use a calculator.
- You should show all your working and use appropriate units.

INFORMATION

- The total mark for this paper is 30.
- The number of marks for each question or part question is shown in brackets [ ].
- The Periodic Table is printed in the question paper.
- Important values, constants and standards are printed in the question paper.

This document has **12** pages. Any blank pages are indicated.

DC (CE/CGW) 340126/3
© UCLES 2025

1 Activated carbon is a form of carbon with the ability to adsorb solutes from solutions. The adsorption of ethanedioic acid molecules, $(COOH)_2$, from dilute ethanedioic acid, $(COOH)_2(aq)$, onto the surface of activated carbon is studied in a series of experiments.

Before beginning the experiment, 500.0 cm^3 of 0.139 mol dm^{-3} $(COOH)_2(aq)$, solution **X**, is made. The activated carbon is placed in an oven at 120 °C for three hours.

The experimental procedure involves the following steps.

step 1 Prepare 100.0 cm^3 of 0.00556 mol dm^{-3} $(COOH)_2(aq)$ from solution **X**.

step 2 Transfer 50.0 cm^3 of the 0.00556 mol dm^{-3} $(COOH)_2(aq)$ into a conical flask.

step 3 Add 0.500 g of activated carbon to the conical flask and start a stopwatch.

step 4 Shake the flask and immediately remove a 5.0 cm^3 sample from the flask. Determine the mass of non-adsorbed $(COOH)_2$ in the sample using chromatography.

step 5 Repeat step 4 at suitable time intervals until there is no further change in the mass of non-adsorbed $(COOH)_2$ in the sample.

(a) Solid ethanedioic acid has the formula $(COOH)_2{\bullet}2H_2O$.

(i) Calculate the mass of $(COOH)_2{\bullet}2H_2O(s)$ required to prepare 500.0 cm^3 of 0.139 mol dm^{-3} $(COOH)_2(aq)$, solution **X**.

mass = ... g [1]

(ii) The mass of $(COOH)_2{\bullet}2H_2O(s)$ calculated in **(a)(i)** is placed into a 100 cm^3 beaker. Describe the steps taken to prepare 500.0 cm^3 of 0.139 mol dm^{-3} $(COOH)_2(aq)$.

Give the name and capacity of any apparatus used.

Write your answer using a series of numbered steps.

.....

.....

.....

.....

.....

.....

..... [3]

DO NOT WRITE IN THIS MARGIN

(b) $(COOH)_2 \cdot 2H_2O(s)$ is corrosive. Other than wearing eye protection and a lab coat, state **one** safety precaution that should be taken when using $(COOH)_2 \cdot 2H_2O(s)$.

..... [1]

(c) Suggest why the activated carbon is placed in the oven before use.

..... [1]

(d) In step 1, solution **X** is diluted to a concentration of 0.00556 mol dm^{-3}.

Calculate the volume of solution **X** needed to make 100.0 cm^3 of 0.00556 mol dm^{-3} $(COOH)_2(aq)$.

volume of solution **X** = ... cm^3 [1]

(e) Identify the most appropriate piece of equipment to transfer 50.0 cm^3 of diluted $(COOH)_2(aq)$ in step 2.

..... [1]

(f) Suggest a reason why the conical flask is shaken in step 4.

..... [1]

DO NOT WRITE IN THIS MARGIN

(g) The results of the experiment are shown in Table 1.1.

Table 1.1

time, t / min	mass of non-adsorbed $(COOH)_2$ in 5.0 cm^3 sample / mg	mass of $(COOH)_2$ adsorbed by activated carbon in 5.0 cm^3 sample / mg
0	2.50	0.00
5	1.90	
15	1.52	
30	1.43	
45	0.99	
60	0.88	
90	0.81	
120	0.80	
150	0.80	

(i) Complete Table 1.1. [1]

(ii) Plot a graph on the grid in Fig. 1.1 to show the relationship between mass of $(COOH)_2$ adsorbed by activated carbon in 5.0 cm^3 sample and time, t. Use a cross (×) to plot each data point.

Draw a curved line of best fit.

[2]

(iii) Identify the independent variable.

..... [1]

(iv) Suggest **one** variable that needs to be controlled that is **not** stated in the experimental procedure.

..... [1]

(v) Circle the **one** point on the graph that you consider to be most anomalous.

Explain the error in timing that may have led to this anomalous point.

..... [1]

DO NOT WRITE IN THIS MARGIN

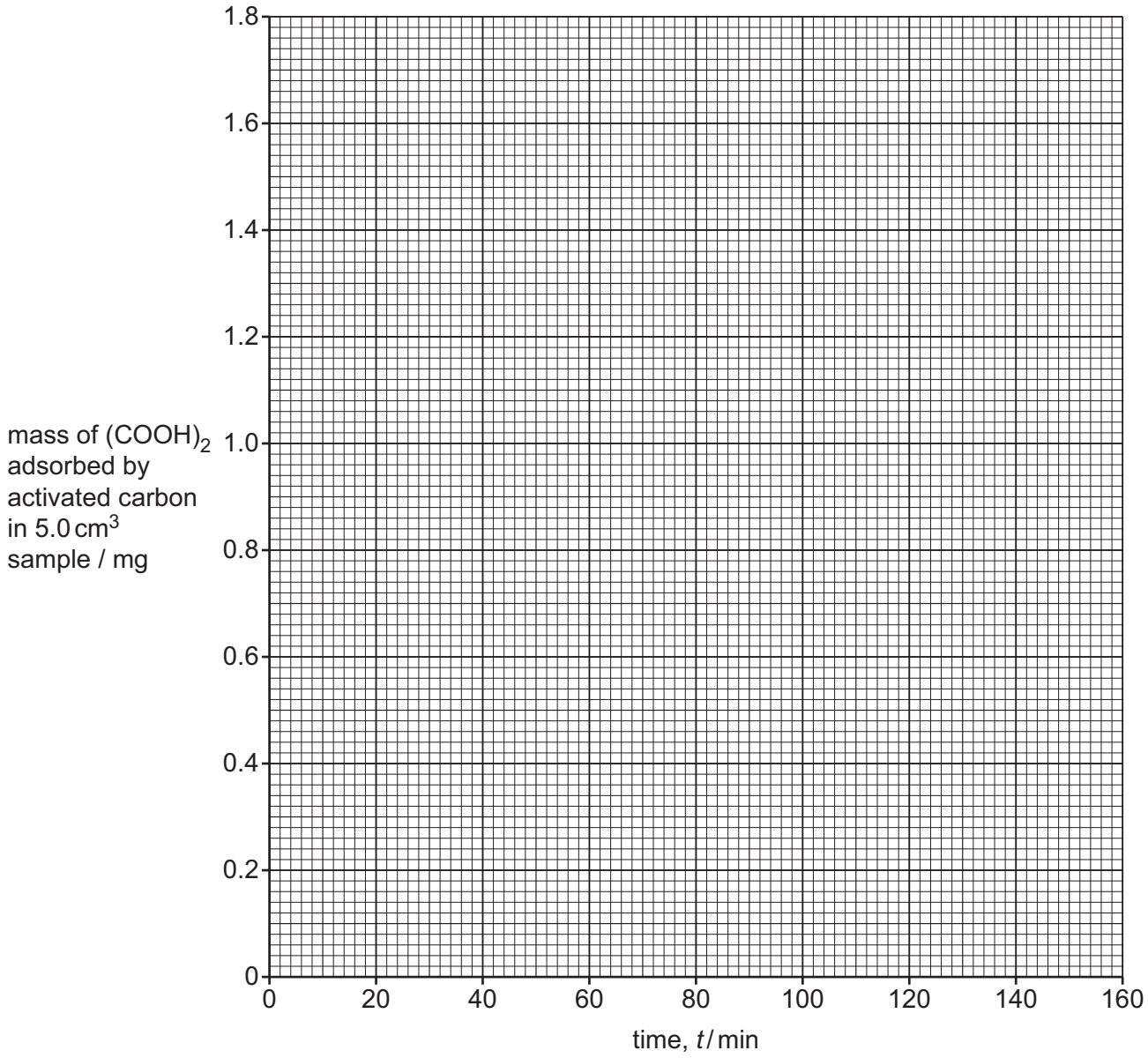

Fig. 1.1

DO NOT WRITE IN THIS MARGIN

(h) The experiment is repeated using different concentrations of $(COOH)_2(aq)$ prepared in step 1. The results are shown in Table 1.2.

Table 1.2

1	2	3	4	5
m_i / mg	m_e / mg	$(m_i - m_e)$ / mg	q_e / mg g^{-1}	$\frac{m_e}{q_e}$ / g
2.5	0.80	1.70	34.0	0.0235
5.0	2.10	2.90	58.0	0.0362
7.5	4.03	3.47	69.4	0.0581
10.0	6.41	3.59	71.8	0.0893
12.5	8.87	3.63	72.6	0.1222

m_i is the initial mass of $(COOH)_2$ in 5.0 cm^3 sample.
m_e is the mass of non-adsorbed $(COOH)_2$ in the final 5.0 cm^3 sample at the end of step 5.
q_e is the mass of $(COOH)_2$ adsorbed per gram of activated carbon.

(i) A plot of $\frac{m_e}{q_e}$ against m_e gives the line of best fit shown in Fig. 1.2.

Use Fig. 1.2 to determine the gradient of the line of best fit.

State the coordinates of both points you used in your calculation.

coordinates 1 ..... coordinates 2 .....

Include units in your answer.

gradient = ...

units = ...
[3]

(ii) The adsorption parameter, q_0, is the maximum mass of $(COOH)_2$ adsorbed per gram of activated carbon.

The equation of the line of best fit plotted in Fig. 1.2 is shown.

$$\frac{m_e}{q_e} = \frac{m_e}{q_0} + \text{constant}$$

Use the gradient determined in **(h)(i)** to calculate the adsorption parameter, q_0.

[If you were unable to determine an answer to **(h)(i)**, then use the value 0.0136 for the gradient. This is **not** the correct answer.]

q_0 = ... mg g^{-1} [1]

DO NOT WRITE IN THIS MARGIN

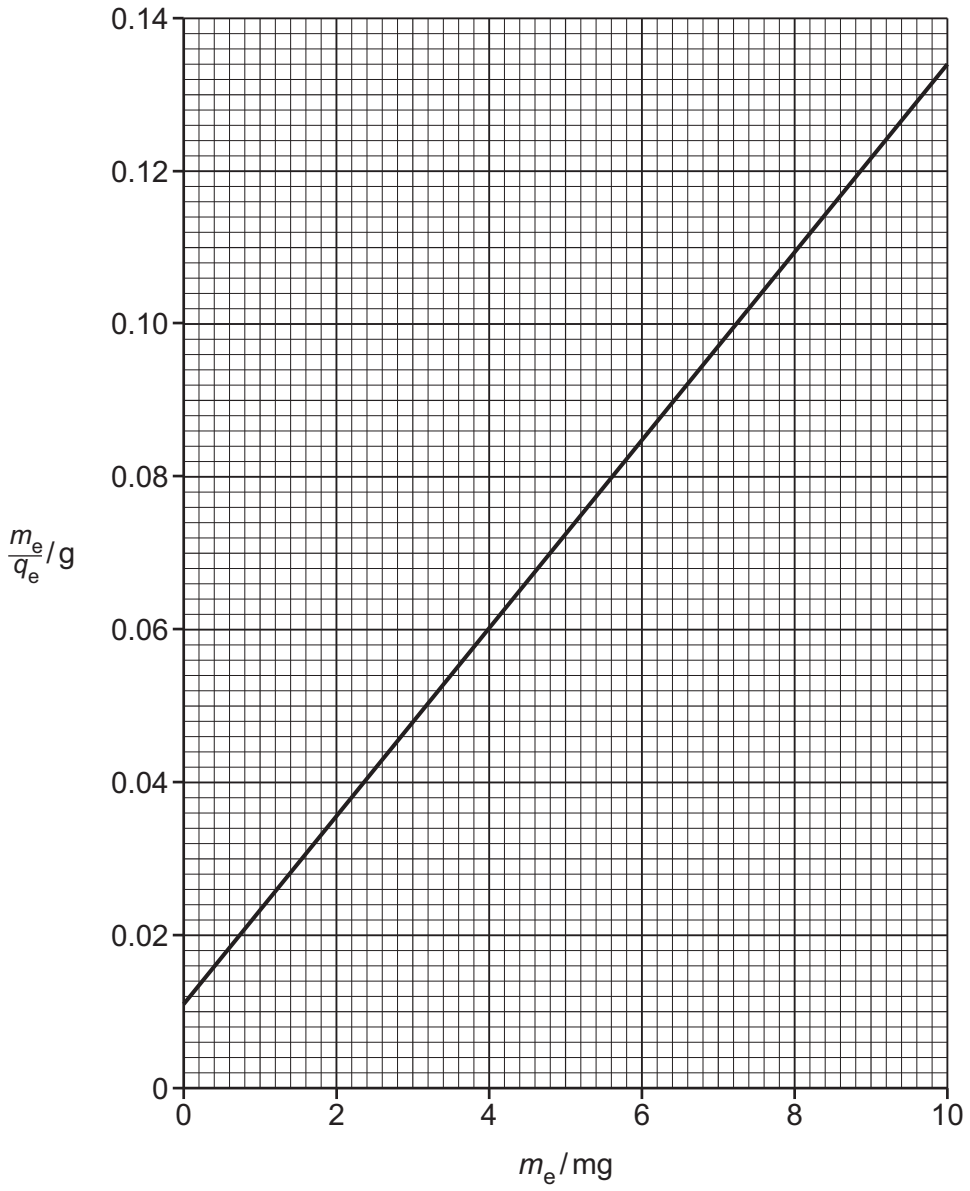

Fig. 1.2

(i) The experiment is repeated and the value of q_0 is calculated to be 78.1 mg g^{-1}. The total percentage error from the experimental procedure is 6.5%.

The data book value of q_0 is 86.0 mg g^{-1}.

Use this information to determine whether the error in the repeated experiment could be accounted for by experimental errors or is caused by other factors.

Show your working.

..... [1]

[Total: 20]

DO NOT WRITE IN THIS MARGIN

2 The enthalpy change of combustion, ΔH_c, of butane, C_4H_{10}, can be determined using the apparatus shown in Fig. 2.1.

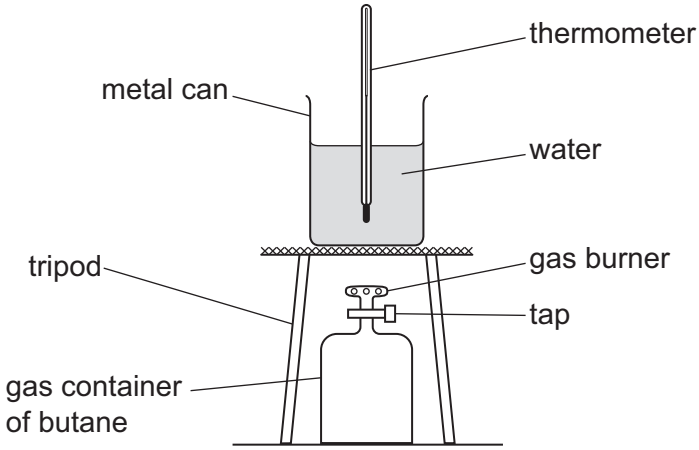

Fig. 2.1

The following steps are carried out.

step 1 Use a 500 cm^3 measuring cylinder to transfer 320 cm^3 of water into a metal can.

step 2 Place a thermometer into the water. Record the initial temperature of the water in the metal can.

step 3 Weigh the gas container with burner and record the initial mass.

step 4 Set up the apparatus as shown in Fig. 2.1.

step 5 Light the burner and allow the flame to heat the water in the metal can for three minutes.

step 6 Switch off the burner and record the maximum temperature reached.

step 7 When cool, reweigh the gas container with burner and record the final mass.

The results are shown in Table 2.1.

Table 2.1

initial temperature of water / °C	maximum temperature of water / °C	change in temperature of water, ΔT / °C	initial mass of gas container with burner / g	final mass of gas container with burner / g	mass of butane burned / g
19.3	76.6		183.56	181.46	

(a) Complete Table 2.1. Record your answers to the appropriate number of decimal places. [2]

DO NOT WRITE IN THIS MARGIN

(b) Use the relationship $q = mc\Delta T$ to calculate the energy, q, in J, gained by the water.
$1.00\,cm^3$ of water has a mass of 1.00 g.

q = ... J [1]

(c) Calculate the enthalpy change of combustion, ΔH_c, of butane, in $kJ\,mol^{-1}$.

Give your answer to **three** significant figures.

ΔH_c = ... $kJ\,mol^{-1}$ [2]

(d) Without changing the apparatus, suggest what should be done in step 6 before recording the maximum temperature reached to improve the experimental procedure.

..... [1]

(e) The $500\,cm^3$ measuring cylinder has graduations every $5\,cm^3$.
Calculate the percentage error in the measurement of the volume of water.
Show your working.

percentage error = ... % [1]

(f) A student suggests that the value calculated in **(c)** is different from the actual value of ΔH_c of butane because of heat lost during the experiment. Suggest **one** change to the apparatus that would reduce the heat lost.

..... [1]

(g) The experiment was repeated but the burner was switched off after only two minutes.

(i) Suggest why this might contribute to a reduction in the accuracy of ΔH_c of butane.

..... [1]

(ii) Suggest why this might contribute to an increase in the accuracy of ΔH_c of butane.

..... [1]

[Total: 10]

DO NOT WRITE IN THIS MARGIN

BLANK PAGE

DO NOT WRITE IN THIS MARGIN

Important values, constants and standards

molar gas constant	$R = 8.31\,J\,K^{-1}\,mol^{-1}$
Faraday constant	$F = 9.65 \times 10^{4}\,C\,mol^{-1}$
Avogadro constant	$L = 6.02 \times 10^{23}\,mol^{-1}$
electronic charge	$e = -1.60 \times 10^{-19}\,C$
molar volume of gas	$V_m = 22.4\,dm^3\,mol^{-1}$ at s.t.p. (101 kPa and 273 K) $V_m = 24.0\,dm^3\,mol^{-1}$ at room conditions
ionic product of water	$K_w = 1.00 \times 10^{-14}\,mol^2\,dm^{-6}$ (at 298 K (25 °C))
specific heat capacity of water	$c = 4.18\,kJ\,kg^{-1}\,K^{-1}$ ($4.18\,J\,g^{-1}\,K^{-1}$)

DO NOT WRITE IN THIS MARGIN

The Periodic Table of Elements

Key

atomic number
atomic symbol
name
relative atomic mass

Group																	
1	2											13	14	15	16	17	18
							1 H hydrogen 1.0										2 He helium 4.0
3 Li lithium 6.9	4 Be beryllium 9.0											5 B boron 10.8	6 C carbon 12.0	7 N nitrogen 14.0	8 O oxygen 16.0	9 F fluorine 19.0	10 Ne neon 20.2
11 Na sodium 23.0	12 Mg magnesium 24.3	3	4	5	6	7	8	9	10	11	12	13 Al aluminium 27.0	14 Si silicon 28.1	15 P phosphorus 31.0	16 S sulfur 32.1	17 Cl chlorine 35.5	18 Ar argon 39.9
19 K potassium 39.1	20 Ca calcium 40.1	21 Sc scandium 45.0	22 Ti titanium 47.9	23 V vanadium 50.9	24 Cr chromium 52.0	25 Mn manganese 54.9	26 Fe iron 55.8	27 Co cobalt 58.9	28 Ni nickel 58.7	29 Cu copper 63.5	30 Zn zinc 65.4	31 Ga gallium 69.7	32 Ge germanium 72.6	33 As arsenic 74.9	34 Se selenium 79.0	35 Br bromine 79.9	36 Kr krypton 83.8
37 Rb rubidium 85.5	38 Sr strontium 87.6	39 Y yttrium 88.9	40 Zr zirconium 91.2	41 Nb niobium 92.9	42 Mo molybdenum 95.9	43 Tc technetium –	44 Ru ruthenium 101.1	45 Rh rhodium 102.9	46 Pd palladium 106.4	47 Ag silver 107.9	48 Cd cadmium 112.4	49 In indium 114.8	50 Sn tin 118.7	51 Sb antimony 121.8	52 Te tellurium 127.6	53 I iodine 126.9	54 Xe xenon 131.3
55 Cs caesium 132.9	56 Ba barium 137.3	57–71 lanthanoids	72 Hf hafnium 178.5	73 Ta tantalum 180.9	74 W tungsten 183.8	75 Re rhenium 186.2	76 Os osmium 190.2	77 Ir iridium 192.2	78 Pt platinum 195.1	79 Au gold 197.0	80 Hg mercury 200.6	81 Tl thallium 204.4	82 Pb lead 207.2	83 Bi bismuth 209.0	84 Po polonium –	85 At astatine –	86 Rn radon –
87 Fr francium –	88 Ra radium –	89–103 actinoids	104 Rf rutherfordium –	105 Db dubnium –	106 Sg seaborgium –	107 Bh bohrium –	108 Hs hassium –	109 Mt meitnerium –	110 Ds darmstadtium –	111 Rg roentgenium –	112 Cn copernicium –	113 Nh nihonium –	114 Fl flerovium –	115 Mc moscovium –	116 Lv livermorium –	117 Ts tennessine –	118 Og oganesson –

lanthanoids	57 La lanthanum 138.9	58 Ce cerium 140.1	59 Pr praseodymium 140.9	60 Nd neodymium 144.2	61 Pm promethium –	62 Sm samarium 150.4	63 Eu europium 152.0	64 Gd gadolinium 157.3	65 Tb terbium 158.9	66 Dy dysprosium 162.5	67 Ho holmium 164.9	68 Er erbium 167.3	69 Tm thulium 168.9	70 Yb ytterbium 173.1	71 Lu lutetium 175.0
actinoids	89 Ac actinium –	90 Th thorium 232.0	91 Pa protactinium 231.0	92 U uranium 238.0	93 Np neptunium –	94 Pu plutonium –	95 Am americium –	96 Cm curium –	97 Bk berkelium –	98 Cf californium –	99 Es einsteinium –	100 Fm fermium –	101 Md mendelevium –	102 No nobelium –	103 Lr lawrencium –

To avoid the issue of disclosure of answer-related information to candidates, all copyright acknowledgements are reproduced online in the Cambridge Assessment International Education Copyright Acknowledgements Booklet. This is produced for each series of examinations and is freely available to download at www.cambridgeinternational.org after the live examination series.

© UCLES 2025

DO NOT WRITE IN THIS MARGIN DO NOT WRITE IN THIS MARGIN DO NOT WRITE IN THIS MARGIN DO NOT WRITE IN THIS MARGIN DO NOT WRITE IN THIS MARGIN