Cambridge Assessment International Education

Cambridge O Level

CANDIDATE NAME	

CENTRE NUMBER						CANDIDATE NUMBER				

3239170897

CHEMISTRY **5070/41**

Paper 4 Alternative to Practical **May/June 2024**

1 hour

You must answer on the question paper.

No additional materials are needed.

INSTRUCTIONS

- Answer **all** questions.
- Use a black or dark blue pen. You may use an HB pencil for any diagrams or graphs.
- Write your name, centre number and candidate number in the boxes at the top of the page.
- Write your answer to each question in the space provided.
- Do **not** use an erasable pen or correction fluid.
- Do **not** write on any bar codes.
- You may use a calculator.
- You should show all your working and use appropriate units.

INFORMATION

- The total mark for this paper is 40.
- The number of marks for each question or part question is shown in brackets [ ].
- Notes for use in qualitative analysis are provided in the question paper.

This document has **12** pages.

DC (DE/CGW) 326684/4
© UCLES 2024

1 A student finds the concentration of a dilute acid, HA(aq), by titration.

The student:

- adds 25.0 cm^3 of aqueous sodium hydroxide to a conical flask
- adds a few drops of methyl orange indicator to the aqueous sodium hydroxide
- slowly adds HA(aq) to the aqueous sodium hydroxide until the methyl orange changes colour
- records the volume of HA(aq) added.

(a) **(i)** Fig. 1.1 shows the apparatus the student uses to measure 25.0 cm^3 of aqueous sodium hydroxide.

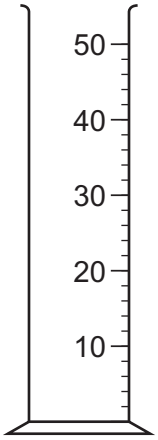

Fig. 1.1

Name the apparatus shown in Fig. 1.1.

..... [1]

(ii) Name a more suitable piece of apparatus to measure 25.0 cm^3 of aqueous sodium hydroxide.

..... [1]

(iii) Fig. 1.2 shows the apparatus used to determine the volume of HA(aq) at the end of the experiment.

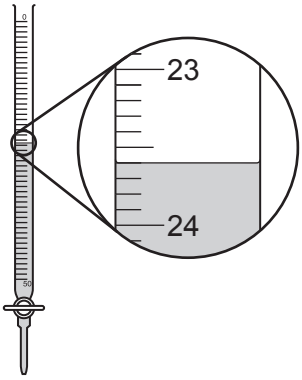

Fig. 1.2

Name the apparatus shown in Fig. 1.2.

..... [1]

(iv) The initial reading on this apparatus is 1.0 cm^3.

Use Fig. 1.2 to determine the volume of HA(aq) used in the titration.

volume of HA(aq) = ... cm^3 [1]

(b) The student washes the apparatus in Fig. 1.2 before it is used.

State the substance used to wash the apparatus.

..... [1]

(c) Describe the colour change of the methyl orange at the end-point.

from ..... to ..... [1]

[Total: 6]

2 **(a)** A student investigates the reaction of four metals, **A**, **B**, **C** and **D**, with aqueous copper(II) sulfate.

The four metals are all grey solids.

The student:

- puts 25 cm^3 of aqueous copper(II) sulfate into a beaker and measures its temperature
- records this temperature in Table 2.1
- adds a sample of **A** to the aqueous copper(II) sulfate
- stirs the reaction mixture until there is no further increase in temperature
- measures the highest temperature of the mixture and records this temperature in Table 2.1
- observes any changes in the appearance of the mixture in the beaker.

The student repeats the experiment three more times using **B**, **C** and **D** instead of **A**.

The results for **D** are shown in Fig. 2.1.

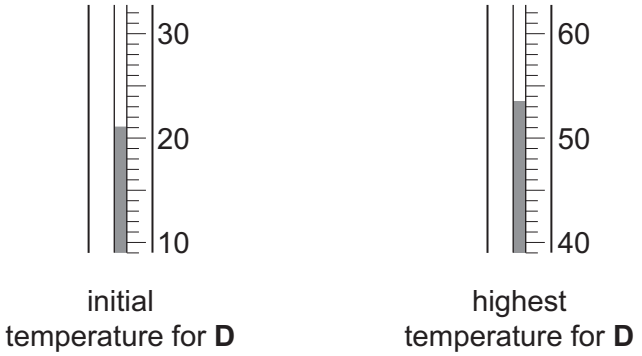

Fig. 2.1

The results for **A**, **B** and **C** are shown in Table 2.1.

Table 2.1

metal	initial temperature / °C	highest temperature / °C	temperature increase / °C
A	20	69.5	49.5
B	24.5	46.0	
C	22.0	61.0	39.0
D			

(i) State the value in Table 2.1 which the student records to an incorrect degree of precision.

..... [1]

(ii) The temperatures for **D** are shown in Fig. 2.1.

Record these temperatures in Table 2.1.

Calculate and record the temperature increases for **B** and **D** in Table 2.1.

[3]

(iii) The equation for the reaction between **B** and aqueous copper(II) sulfate is shown.

$$\mathbf{B}(s) + CuSO_4(aq) \rightarrow \mathbf{B}SO_4(aq) + Cu(s)$$

Copper(II) sulfate is a blue solution.

At the end of the experiment, the student observes a colourless solution, a grey solid and a brown solid.

Explain how these observations show that **B** is in excess in this reaction.

.....

.....

..... [1]

(iv) Using the equation in **(iii)**, write the formula for:

- the colourless solution
- the grey solid
- the brown solid.

colourless solution .....

grey solid .....

brown solid .....

[1]

(b) Use your results to arrange **A**, **B**, **C** and **D** in decreasing order of reactivity.

Explain how the results give this order of reactivity.

most reactive .....

↓ .....

.....

least reactive .....

explanation .....

.....

.....

[2]

(c) A student repeats the experiment using a fifth metal.

This metal is the second most reactive of the five metals.

Suggest a temperature increase for this experiment.

..... [1]

(d) The temperature increases measured are less than the true values for these experiments.

Suggest a reason for this.

Describe an improvement to the method which makes the results closer to the true values.

reason .....

.....

improvement .....

.....

[2]

(e) State and explain the effect of using half the concentration of aqueous copper(II) sulfate on the temperature increase for metal **A**.

effect .....

.....

explanation .....

.....

.....

[3]

[Total: 14]

© UCLES 2024

3 A student does a series of experiments to investigate solution **R**.

(a) The student leaves a wooden splint with one end dipped into **R** for ten minutes. The student then places the damp end of the wooden splint into a blue Bunsen burner flame.

The flame briefly shows a shade of red and then turns yellow.

(i) State **two** possible conclusions from this observation.

.....

..... [2]

(ii) Explain why it is difficult to make a definite conclusion from the observation in **(a)(i)**.

..... [1]

(b) The student adds dilute nitric acid to **R**, followed by aqueous barium nitrate.

The student concludes that **R** does not contain sulfate ions.

State the observation which allows the student to make this conclusion.

..... [1]

(c) The student adds dilute nitric acid to **R**, followed by aqueous silver nitrate.

The student observes a white precipitate.

State a conclusion from this observation.

..... [1]

(d) The student adds aqueous silver nitrate to aqueous sodium carbonate. A white precipitate forms.

The student adds dilute nitric acid a drop at a time until no further change is seen.

The white precipitate dissolves to form a colourless solution.

(i) Describe **one** other observation.

.....

..... [1]

(ii) Suggest why it is important to add dilute nitric acid in **(c)**.

.....

..... [1]

(e) The student adds a few drops of aqueous sodium hydroxide to **R**.

State the observation the student makes which suggests that **R** may contain Ca^{2+}.

..... [1]

(f) Describe what else the student needs to do to confirm that Ca^{2+} ions are present.

State what the student observes.

what the student does .....

observation .....
[2]

(g) The student warms the solution from **(e)**.

The student concludes that ammonia gas is produced.

(i) State the observation the student makes which confirms that ammonia gas is produced.

.....

..... [1]

(ii) Identify a cation, other than calcium, present in **R**.

.....

..... [1]

(h) Solution **R** is made from a mixture of two different ionic compounds.

Suggest the names of these **two** compounds.

.....

..... [2]

[Total: 14]

© UCLES 2024

4 Barium carbonate decomposes when heated. The word equation for the reaction is shown.

barium carbonate $\rightarrow$ barium oxide + carbon dioxide

Plan an experiment to determine the percentage loss in mass when barium carbonate is heated.

Your plan must include the use of common laboratory apparatus and a sample of barium carbonate. No other chemicals should be used.

Your plan must include:

- the apparatus needed
- the method to use and the measurements to take
- procedures to ensure that the percentage determined is as accurate as possible
- how the measurements are used to determine the percentage loss in mass.

You may draw a diagram to help answer the question.

.....

.....

.....

.....

.....

.....

.....

.....

.....

.....

.....

.....

.....

.....

.....

.....

.....

.....

.....

.....

.....

.....

.....

[6]

Notes for use in qualitative analysis

Tests for anions

anion	test	test result
carbonate, CO_3^{2-}	add dilute acid, then test for carbon dioxide gas	effervescence, carbon dioxide produced
chloride, Cl^- [in solution]	acidify with dilute nitric acid, then add aqueous silver nitrate	white ppt.
bromide, Br^- [in solution]	acidify with dilute nitric acid, then add aqueous silver nitrate	cream ppt.
iodide, I^- [in solution]	acidify with dilute nitric acid, then add aqueous silver nitrate	yellow ppt.
nitrate, NO_3^- [in solution]	add aqueous sodium hydroxide, then aluminium foil; warm carefully	ammonia produced
sulfate, SO_4^{2-} [in solution]	acidify with dilute nitric acid, then add aqueous barium nitrate	white ppt.
sulfite, SO_3^{2-}	add a small volume of acidified aqueous potassium manganate(VII)	the acidified aqueous potassium manganate(VII) changes colour from purple to colourless

Tests for aqueous cations

cation	effect of aqueous sodium hydroxide	effect of aqueous ammonia
aluminium, Al^{3+}	white ppt., soluble in excess, giving a colourless solution	white ppt., insoluble in excess
ammonium, NH_4^+	ammonia produced on warming	–
calcium, Ca^{2+}	white ppt., insoluble in excess	no ppt. or very slight white ppt.
chromium(III), Cr^{3+}	green ppt., soluble in excess	green ppt., insoluble in excess
copper(II), Cu^{2+}	light blue ppt., insoluble in excess	light blue ppt., soluble in excess, giving a dark blue solution
iron(II), Fe^{2+}	green ppt., insoluble in excess, ppt. turns brown near surface on standing	green ppt., insoluble in excess, ppt. turns brown near surface on standing
iron(III), Fe^{3+}	red-brown ppt., insoluble in excess	red-brown ppt., insoluble in excess
zinc, Zn^{2+}	white ppt., soluble in excess, giving a colourless solution	white ppt., soluble in excess, giving a colourless solution

© UCLES 2024

Tests for gases

gas	test and test result
ammonia, NH_3	turns damp red litmus paper blue
carbon dioxide, CO_2	turns limewater milky
chlorine, Cl_2	bleaches damp litmus paper
hydrogen, H_2	‘pops’ with a lighted splint
oxygen, O_2	relights a glowing splint
sulfur dioxide, SO_2	turns acidified aqueous potassium manganate(VII) from purple to colourless

Flame tests for metal ions

metal ion	flame colour
lithium, Li^+	red
sodium, Na^+	yellow
potassium, K^+	lilac
calcium, Ca^{2+}	orange-red
barium, Ba^{2+}	light green
copper(II), Cu^{2+}	blue-green

Permission to reproduce items where third-party owned material protected by copyright is included has been sought and cleared where possible. Every reasonable effort has been made by the publisher (UCLES) to trace copyright holders, but if any items requiring clearance have unwittingly been included, the publisher will be pleased to make amends at the earliest possible opportunity.

To avoid the issue of disclosure of answer-related information to candidates, all copyright acknowledgements are reproduced online in the Cambridge Assessment International Education Copyright Acknowledgements Booklet. This is produced for each series of examinations and is freely available to download at www.cambridgeinternational.org after the live examination series.

Cambridge Assessment International Education is part of Cambridge Assessment. Cambridge Assessment is the brand name of the University of Cambridge Local Examinations Syndicate (UCLES), which is a department of the University of Cambridge.

© UCLES 2024