Cambridge Assessment International Education

Cambridge O Level

CANDIDATE NAME	

CENTRE NUMBER						CANDIDATE NUMBER				

4522538487

ADDITIONAL MATHEMATICS **4037/12**

Paper 1 **October/November 2020**

2 hours

You must answer on the question paper.

No additional materials are needed.

INSTRUCTIONS

- Answer **all** questions.
- Use a black or dark blue pen. You may use an HB pencil for any diagrams or graphs.
- Write your name, centre number and candidate number in the boxes at the top of the page.
- Write your answer to each question in the space provided.
- Do **not** use an erasable pen or correction fluid.
- Do **not** write on any bar codes.
- You should use a calculator where appropriate.
- You must show all necessary working clearly; no marks will be given for unsupported answers from a calculator.
- Give non-exact numerical answers correct to 3 significant figures, or 1 decimal place for angles in degrees, unless a different level of accuracy is specified in the question.

INFORMATION

- The total mark for this paper is 80.
- The number of marks for each question or part question is shown in brackets [ ].

This document has **16** pages. Blank pages are indicated.

DC (LK) 206976
© UCLES 2020

Mathematical Formulae

1. ALGEBRA

Quadratic Equation

For the equation $ax^2 + bx + c = 0$,

$$x = \frac{-b \pm \sqrt{b^2 - 4ac}}{2a}$$

Binomial Theorem

$$(a+b)^n = a^n + \binom{n}{1}a^{n-1}b + \binom{n}{2}a^{n-2}b^2 + \ldots + \binom{n}{r}a^{n-r}b^r + \ldots + b^n$$

where n is a positive integer and $\binom{n}{r} = \frac{n!}{(n-r)!r!}$

Arithmetic series $u_n = a + (n-1)d$

$$S_n = \frac{1}{2}n(a+l) = \frac{1}{2}n\{2a + (n-1)d\}$$

Geometric series $u_n = ar^{n-1}$

$$S_n = \frac{a(1-r^n)}{1-r} \quad (r \neq 1)$$

$$S_\infty = \frac{a}{1-r} \quad (|r| < 1)$$

2. TRIGONOMETRY

Identities

$$\sin^2 A + \cos^2 A = 1$$
$$\sec^2 A = 1 + \tan^2 A$$
$$\operatorname{cosec}^2 A = 1 + \cot^2 A$$

Formulae for ΔABC

$$\frac{a}{\sin A} = \frac{b}{\sin B} = \frac{c}{\sin C}$$

$$a^2 = b^2 + c^2 - 2bc\cos A$$

$$\Delta = \frac{1}{2}bc\sin A$$

© UCLES 2020

1 The curve $y = 2x^2 + k + 4$ intersects the straight line $y = (k+4)x$ at two distinct points. Find the possible values of k. [4]

2

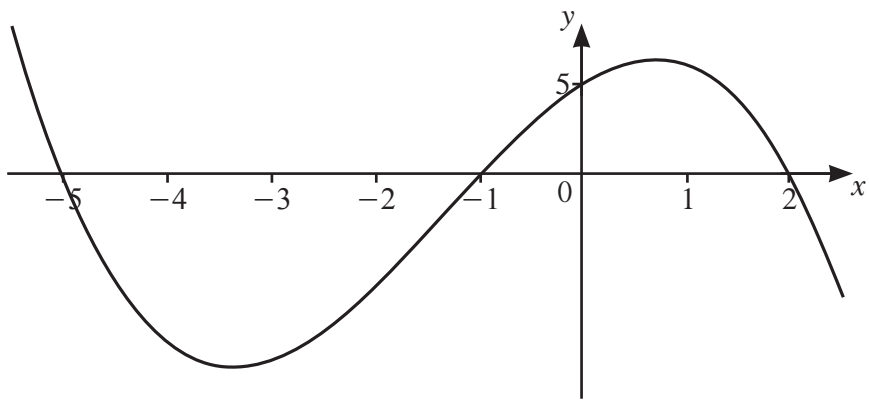

The diagram shows the graph of $y = \mathrm{f}(x)$, where $\mathrm{f}(x)$ is a cubic polynomial.

(a) Find $\mathrm{f}(x)$. [3]

(b) Write down the values of x such that $\mathrm{f}(x) < 0$. [2]

3 **(a)** Write down the amplitude of $2\cos\frac{x}{3} - 1$. [1]

(b) Write down the period of $2\cos\frac{x}{3} - 1$. [1]

(c) On the axes below, sketch the graph of $y = 2\cos\frac{x}{3} - 1$ for $-\pi \leqslant x \leqslant 3\pi$ radians.

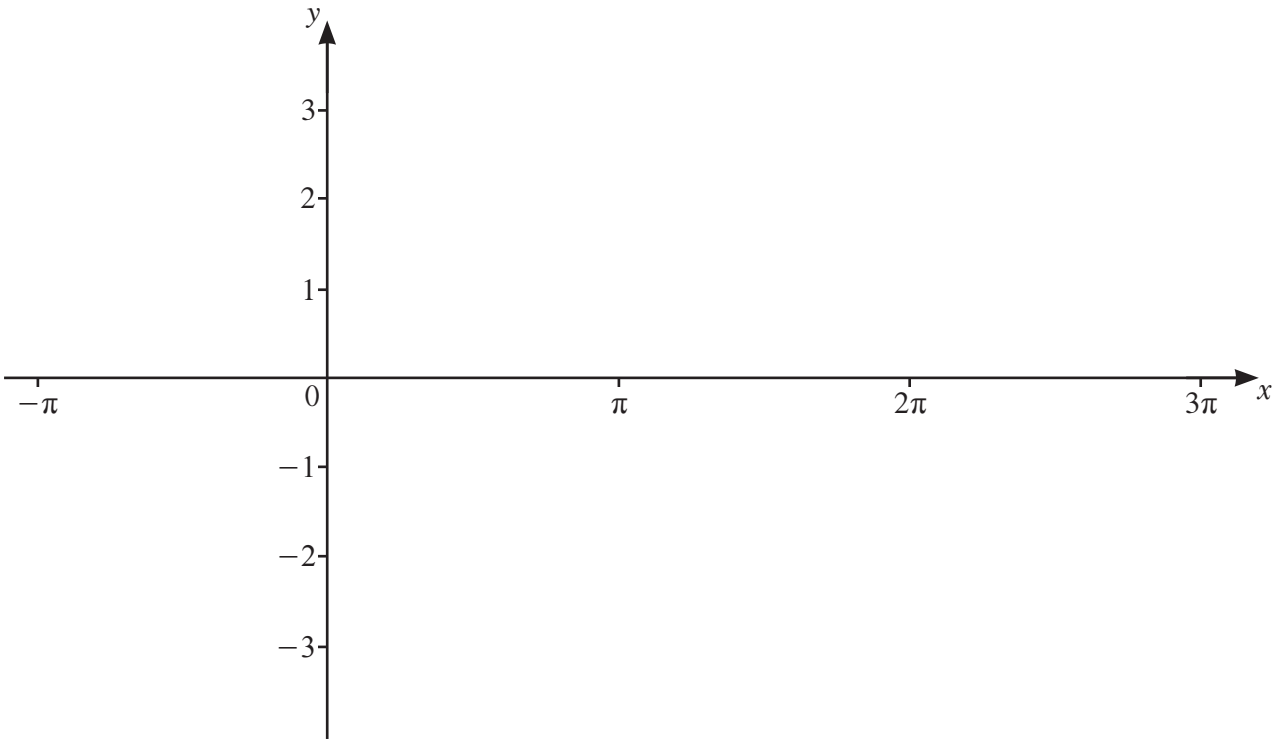

[3]

4 The 7th and 10th terms of an arithmetic progression are 158 and 149 respectively.

(a) Find the common difference and the first term of the progression. [3]

(b) Find the least number of terms of the progression for their sum to be negative. [3]

5 Find the coefficient of x^2 in the expansion of $\left(x-\frac{3}{x}\right)\left(x+\frac{2}{x}\right)^5$. [5]

6 $$f(x) = x^2 + 2x - 3 \quad \text{for } x \geqslant -1$$

(a) Given that the minimum value of $x^2 + 2x - 3$ occurs when $x = -1$, explain why $f(x)$ has an inverse. [1]

(b) On the axes below, sketch the graph of $y = f(x)$ and the graph of $y = f^{-1}(x)$. Label each graph and state the intercepts on the coordinate axes.

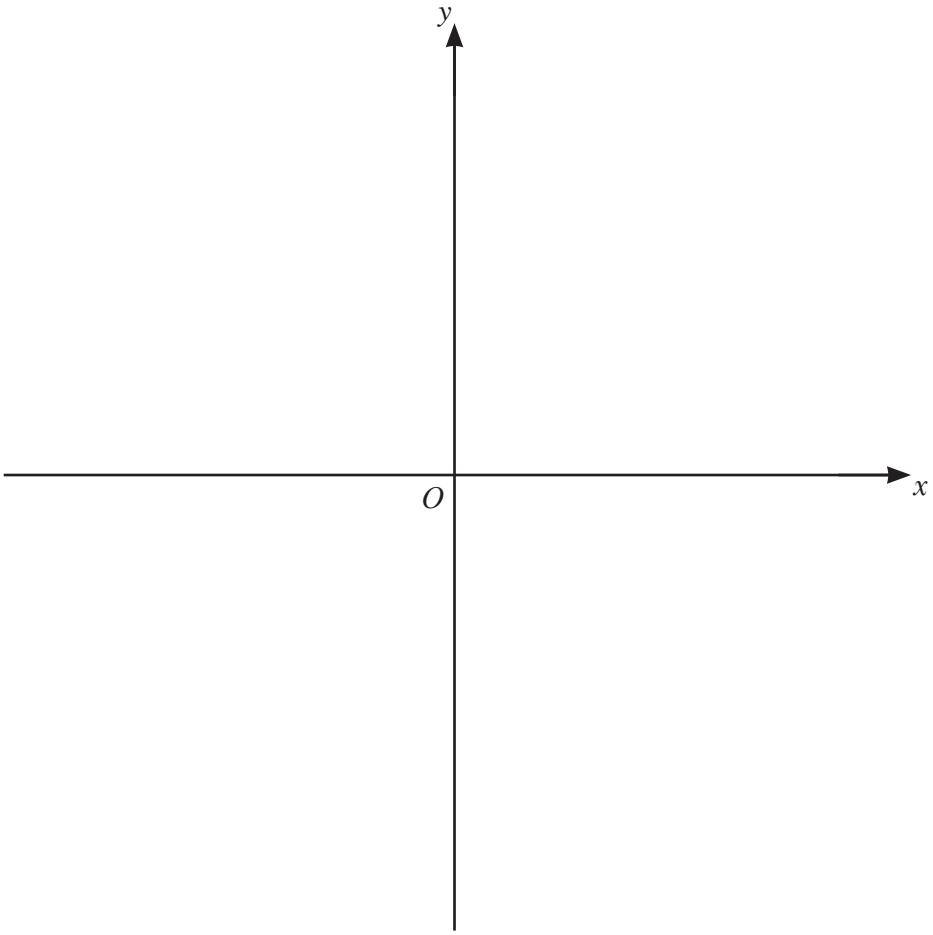

[4]

7 A curve has equation $y = \dfrac{\ln\left(3x^2 - 5\right)}{2x + 1}$ for $3x^2 > 5$.

(a) Find the equation of the normal to the curve at the point where $x = \sqrt{2}$. [6]

(b) Find the approximate change in y as x increases from $\sqrt{2}$ to $\sqrt{2} + h$, where h is small. [1]

8 **(a)** Find the number of ways in which 12 people can be put into 3 groups containing 3, 4 and 5 people respectively. [3]

(b) 4-digit numbers are to be formed using four of the digits 2, 3, 7, 8 and 9. Each digit may be used once only in any 4-digit number. Find how many 4-digit numbers can be formed if

(i) there are no restrictions, [1]

(ii) the number is even, [1]

(iii) the number is greater than 7000 and odd. [3]

9 A curve has equation $y = (2x-1)\sqrt{4x+3}$.

(a) Show that $\dfrac{dy}{dx} = \dfrac{4(Ax+B)}{\sqrt{4x+3}}$, where A and B are constants. [5]

(b) Hence write down the x-coordinate of the stationary point of the curve. [1]

(c) Determine the nature of this stationary point. [2]

10 The polynomial $\mathrm{p}(x) = 6x^3 + ax^2 + bx + 2$, where a and b are integers, has a factor of $x - 2$.

(a) Given that $\mathrm{p}(1) = -2\mathrm{p}(0)$, find the value of a and of b. [4]

(b) Using your values of a and b,

(i) find the remainder when $\mathrm{p}(x)$ is divided by $2x - 1$, [2]

(ii) factorise $\mathrm{p}(x)$. [2]

11 In this question all lengths are in centimetres and all angles are in radians.

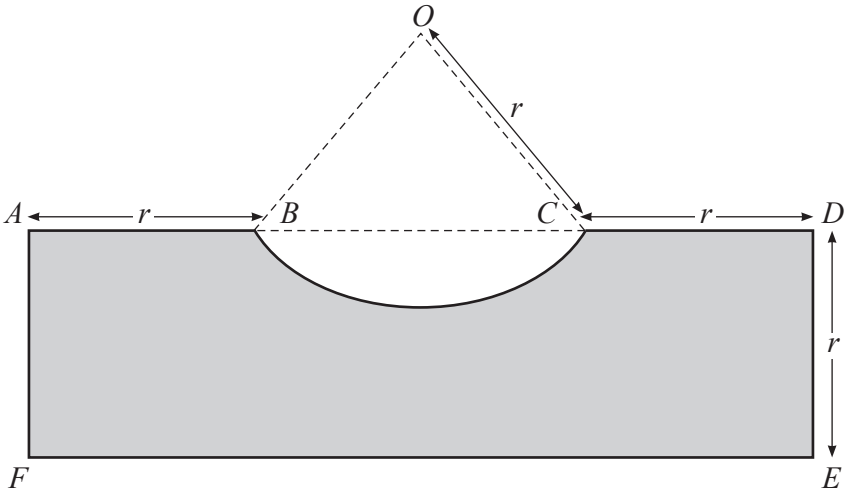

The diagram shows the rectangle $ADEF$, where $AF = DE = r$. The points B and C lie on AD such that $AB = CD = r$. The curve BC is an arc of the circle, centre O, radius r and has a length of $1.5r$.

(a) Show that the perimeter of the shaded region is $(7.5 + 2\sin 0.75)r$. [5]

(b) Find the area of the shaded region, giving your answer in the form kr^2, where k is a constant correct to 2 decimal places. [4]

12 (a)

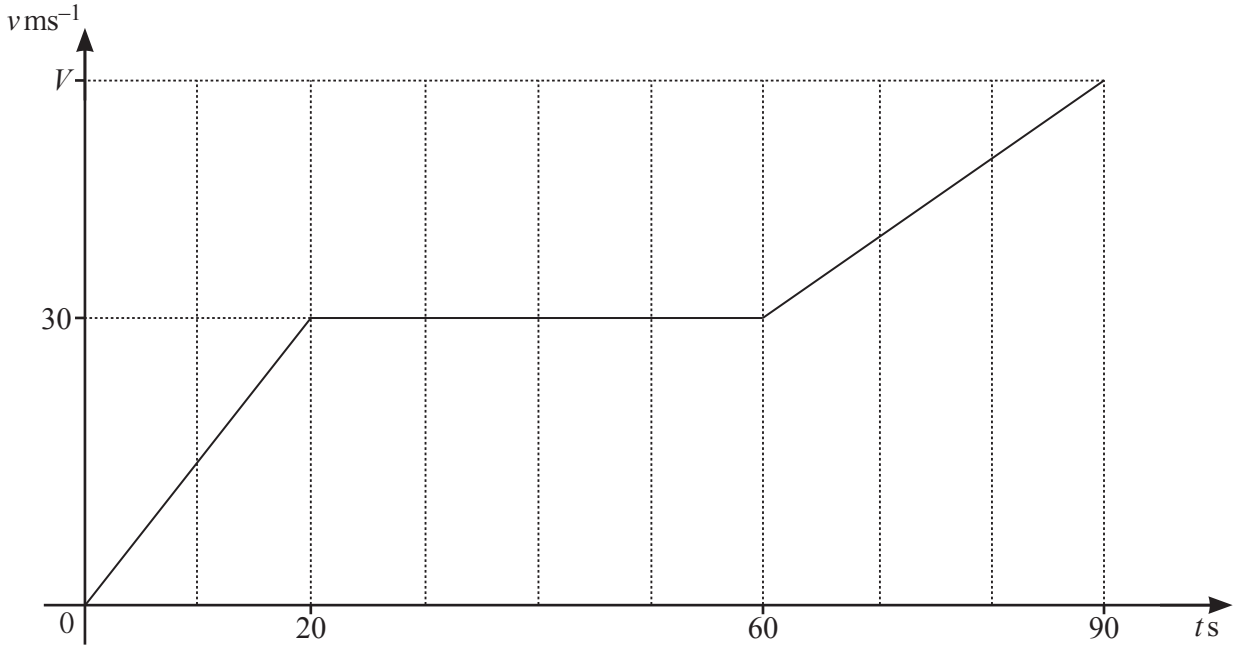

The diagram shows the velocity–time graph of a particle P that travels 2775 m in 90 s, reaching a final velocity of V ms^{-1}.

(i) Find the value of V. [3]

(ii) Write down the acceleration of P when $t = 40$. [1]

(b) The acceleration, a ms^{-2}, of a particle Q travelling in a straight line, is given by $a = 6\cos 2t$ at time t s. When $t = 0$ the particle is at point O and is travelling with a velocity of $10\,\text{ms}^{-1}$.

(i) Find the velocity of Q at time t. [3]

(ii) Find the displacement of Q from O at time t. [3]

BLANK PAGE

Permission to reproduce items where third-party owned material protected by copyright is included has been sought and cleared where possible. Every reasonable effort has been made by the publisher (UCLES) to trace copyright holders, but if any items requiring clearance have unwittingly been included, the publisher will be pleased to make amends at the earliest possible opportunity.

To avoid the issue of disclosure of answer-related information to candidates, all copyright acknowledgements are reproduced online in the Cambridge Assessment International Education Copyright Acknowledgements Booklet. This is produced for each series of examinations and is freely available to download at www.cambridgeinternational.org after the live examination series.

Cambridge Assessment International Education is part of the Cambridge Assessment Group. Cambridge Assessment is the brand name of the University of Cambridge Local Examinations Syndicate (UCLES), which itself is a department of the University of Cambridge.

© UCLES 2020