Cambridge Assessment International Education

Cambridge International AS & A Level

CANDIDATE NAME	

CENTRE NUMBER						CANDIDATE NUMBER				

PHYSICS **9702/33**

Paper 3 Advanced Practical Skills 1 **May/June 2022**

2 hours

You must answer on the question paper.

You will need: The materials and apparatus listed in the confidential instructions

INSTRUCTIONS

- Answer **all** questions.
- Use a black or dark blue pen. You may use an HB pencil for any diagrams or graphs.
- Write your name, centre number and candidate number in the boxes at the top of the page.
- Write your answer to each question in the space provided.
- Do **not** use an erasable pen or correction fluid.
- Do **not** write on any bar codes.
- You will be allowed to work with the apparatus for a maximum of 1 hour for each question.
- You should record all your observations in the spaces provided in the question paper as soon as these observations are made.
- You may use a calculator.
- You should show all your working and use appropriate units.

INFORMATION

- The total mark for this paper is 40.
- The number of marks for each question or part question is shown in brackets [ ].

For Examiner's Use	
1	
2	
Total	

This document has **12** pages.

DC (RW/JG) 304039/2
© UCLES 2022

You may not need to use all of the materials provided.

1 In this experiment, you will investigate an electrical circuit.

You have been provided with a wooden strip with a wire attached.

(a) Measure and record the length *L* of the wire between the nails on the wooden strip, as shown in Fig. 1.1.

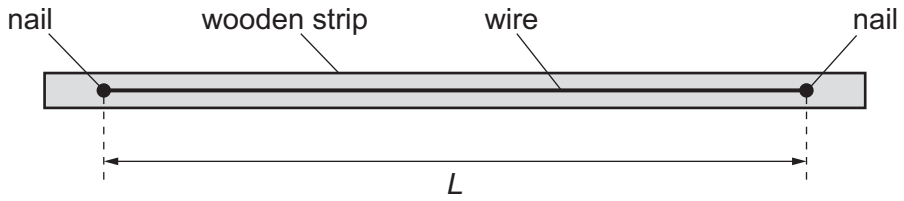

Fig. 1.1

L = ... [1]

(b) You have also been provided with a wire labelled A with crocodile clips at its ends.

- Set up the circuit shown in Fig. 1.2.

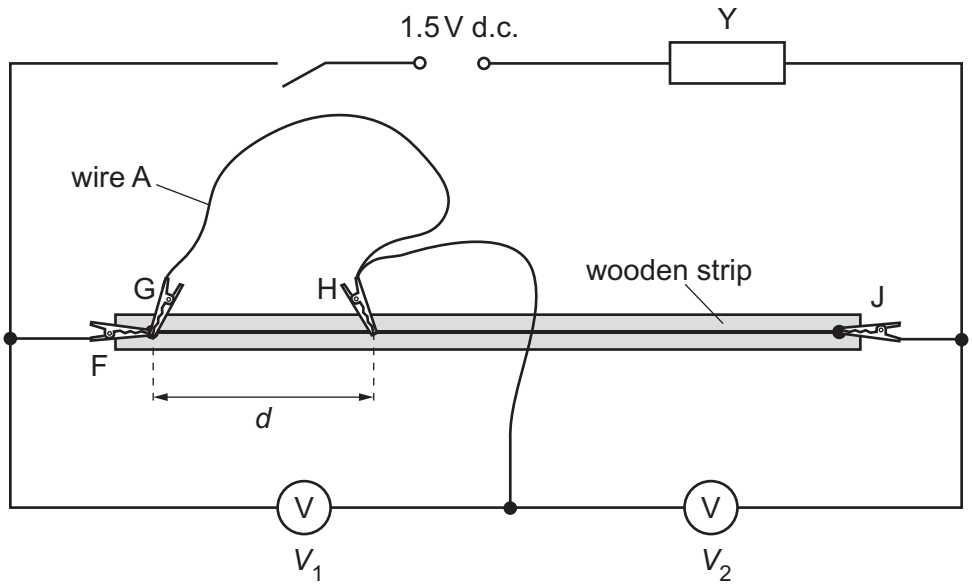

Fig. 1.2

- F, G, H and J are crocodile clips.

  The distance between one of the nails and H is *d*, as shown in Fig. 1.2. Attach H to the wire on the wooden strip so that *d* is approximately 20 cm.

- Close the switch.

- Record the value of *d* and the voltmeter readings V_1 and V_2.

d = ...

V_1 = ...

V_2 = ...

- Open the switch.

[2]

(c) Increase d by placing H at different positions on the wire and record V_1 and V_2.
Repeat until you have six sets of readings of d, V_1 and V_2. Include your values from **(b)**.

Record your results in a table. Include values of $\left(\frac{V_2}{V_1}\right)d$ and d^2 in your table.

[8]

(d) **(i)** Plot a graph of $\left(\frac{V_2}{V_1}\right)d$ on the y-axis against d^2 on the x-axis. [3]

(ii) Draw the straight line of best fit. [1]

(iii) Determine the gradient and y-intercept of this line.

gradient = ...

y-intercept = ...
[2]

(e) It is suggested that the quantities V_1, V_2 and d are related by the equation

$$\left(\frac{V_2}{V_1}\right)d = Pd^2 + Q$$

where P and Q are constants.

Using your answers in **(d)(iii)**, determine values for P and Q.
Give appropriate units.

P = ...

Q = ...
[2]

(f) Wire A has the same length L as the wire between the nails.

Theory suggests that

$$P = -\frac{1}{L} \quad \text{and} \quad Q = L.$$

A student repeats the experiment using two shorter wires of equal length.

Sketch a second line on the graph to show the expected results.
Label this line W. [1]

[Total: 20]

You may not need to use all of the materials provided.

2 In this experiment, you will investigate the motion of two connected masses.

You have been provided with two masses connected by a string.
The larger mass is 100 g and the smaller mass is 10 g.

(a) (i) • Set up the apparatus as shown in Fig. 2.1.

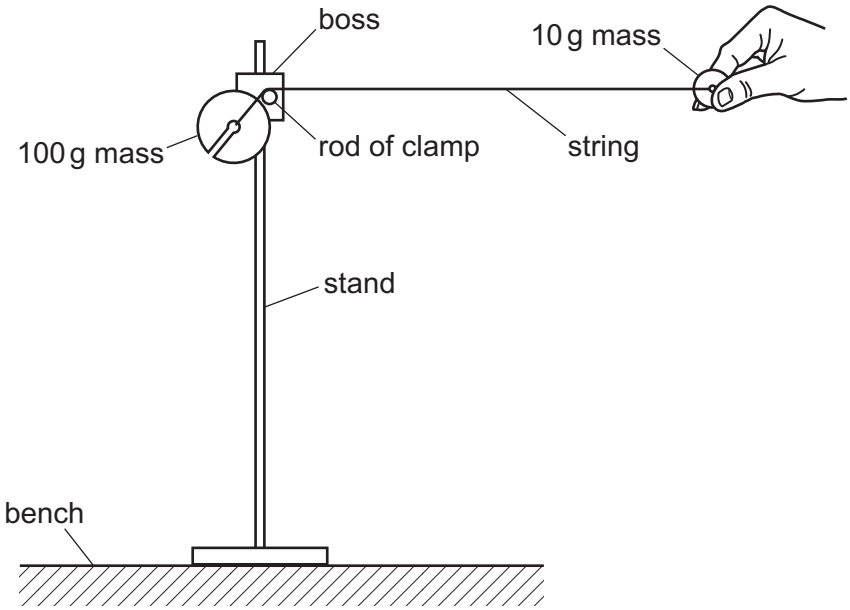

Fig. 2.1

• Hold the 10 g mass so that the string is horizontal and as straight as possible and the 100 g mass is as close to the rod of the clamp as possible. The string should be resting on the rod of the clamp.

When the 10 g mass is released, the 100 g mass will fall downwards.
The 10 g mass will fall and move towards the stand.
The string will wrap itself several times around the rod of the clamp.

You may need to repeat the procedure several times before you see this result.

- Release the 10 g mass.
- The distance fallen by the 100 g mass is *A*, as shown in Fig. 2.2.

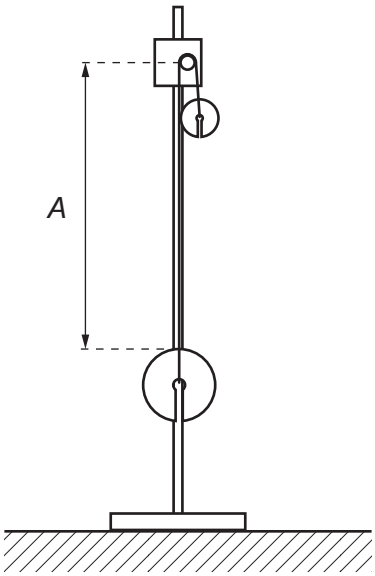

Fig. 2.2

Measure and record *A*.

A = ... [2]

(ii) Estimate the percentage uncertainty in your value of *A*. Show your working.

percentage uncertainty = ...% [1]

(b) Fig. 2.3 shows the 10 g mass held so that the angle between the string and the vertical is θ.

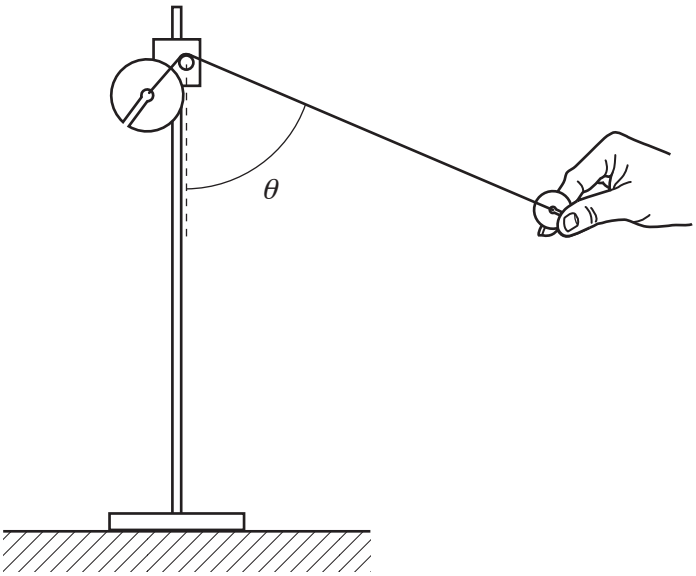

Fig. 2.3

(i)
- Hold the string so that θ is approximately 65°.
- Release the 10 g mass.
- The distance fallen by the 100 g mass is H, as shown in Fig. 2.4.

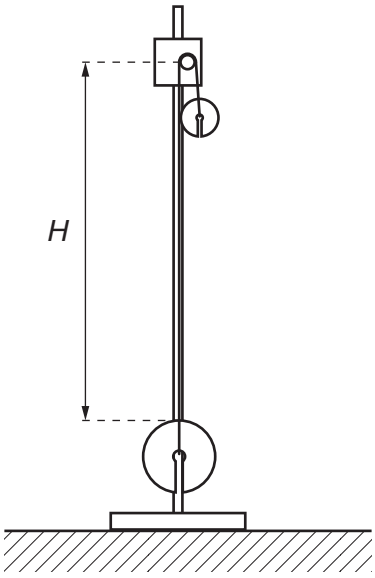

Fig. 2.4

Measure and record θ and H.

θ = ... °

H = ...
[2]

(ii) Calculate $\cos^2\theta$ and $\frac{H}{A}$.

$\cos^2\theta =$ .....

$\frac{H}{A} =$ .....
[1]

(c) Repeat **(b)(i)** and **(b)(ii)** with a value of θ of approximately 45°.

$\theta =$ ..... °

$H =$ .....

$\cos^2\theta =$ .....

$\frac{H}{A} =$ .....
[3]

(d) It is suggested that the relationship between H, A and θ is

$$\frac{H}{A} = k\cos^2\theta + 1$$

where k is a constant.

(i) Using your data, calculate two values of k.

first value of k = ...

second value of k = ...
[1]

(ii) Justify the number of significant figures that you have given for your values of k.

.....

.....

..... [1]

(e) It is suggested that the percentage uncertainty in the values of k is 20%.

Using this uncertainty, explain whether your results support the suggested relationship in **(d)**.

.....

.....

.....

..... [1]

(f) **(i)** Describe **four** sources of uncertainty or limitations of the procedure for this experiment.

For any uncertainties in measurement that you describe, you should state the quantity being measured and a reason for the uncertainty.

1 .....

.....

2 .....

.....

3 .....

.....

4 .....

.....

[4]

(ii) Describe **four** improvements that could be made to this experiment. You may suggest the use of other apparatus or different procedures.

1 .....

.....

2 .....

.....

3 .....

.....

4 .....

.....

[4]

[Total: 20]

Permission to reproduce items where third-party owned material protected by copyright is included has been sought and cleared where possible. Every reasonable effort has been made by the publisher (UCLES) to trace copyright holders, but if any items requiring clearance have unwittingly been included, the publisher will be pleased to make amends at the earliest possible opportunity.

To avoid the issue of disclosure of answer-related information to candidates, all copyright acknowledgements are reproduced online in the Cambridge Assessment International Education Copyright Acknowledgements Booklet. This is produced for each series of examinations and is freely available to download at www.cambridgeinternational.org after the live examination series.

Cambridge Assessment International Education is part of Cambridge Assessment. Cambridge Assessment is the brand name of the University of Cambridge Local Examinations Syndicate (UCLES), which is a department of the University of Cambridge.

© UCLES 2022