Cambridge Assessment International Education

Cambridge International AS & A Level

CANDIDATE NAME	

CENTRE NUMBER						CANDIDATE NUMBER					

4127970738

PHYSICS **9702/42**

Paper 4 A Level Structured Questions **May/June 2023**

2 hours

You must answer on the question paper.

No additional materials are needed.

INSTRUCTIONS

- Answer **all** questions.
- Use a black or dark blue pen. You may use an HB pencil for any diagrams or graphs.
- Write your name, centre number and candidate number in the boxes at the top of the page.
- Write your answer to each question in the space provided.
- Do **not** use an erasable pen or correction fluid.
- Do **not** write on any bar codes.
- You may use a calculator.
- You should show all your working and use appropriate units.

INFORMATION

- The total mark for this paper is 100.
- The number of marks for each question or part question is shown in brackets [ ].

This document has **24** pages. Any blank pages are indicated.

DC (CJ/SG) 313472/3
© UCLES 2023

Data

acceleration of free fall	$g = 9.81\ \text{m s}^{-2}$
speed of light in free space	$c = 3.00 \times 10^{8}\ \text{m s}^{-1}$
elementary charge	$e = 1.60 \times 10^{-19}\ \text{C}$
unified atomic mass unit	$1\ \text{u} = 1.66 \times 10^{-27}\ \text{kg}$
rest mass of proton	$m_p = 1.67 \times 10^{-27}\ \text{kg}$
rest mass of electron	$m_e = 9.11 \times 10^{-31}\ \text{kg}$
Avogadro constant	$N_A = 6.02 \times 10^{23}\ \text{mol}^{-1}$
molar gas constant	$R = 8.31\ \text{J K}^{-1}\ \text{mol}^{-1}$
Boltzmann constant	$k = 1.38 \times 10^{-23}\ \text{J K}^{-1}$
gravitational constant	$G = 6.67 \times 10^{-11}\ \text{N m}^{2}\ \text{kg}^{-2}$
permittivity of free space	$\varepsilon_0 = 8.85 \times 10^{-12}\ \text{F m}^{-1}$ $(\frac{1}{4\pi\varepsilon_0} = 8.99 \times 10^{9}\ \text{m F}^{-1})$
Planck constant	$h = 6.63 \times 10^{-34}\ \text{J s}$
Stefan–Boltzmann constant	$\sigma = 5.67 \times 10^{-8}\ \text{W m}^{-2}\ \text{K}^{-4}$

Formulae

uniformly accelerated motion	$s = ut + \frac{1}{2}at^2$ $v^2 = u^2 + 2as$
hydrostatic pressure	$\Delta p = \rho g \Delta h$
upthrust	$F = \rho g V$
Doppler effect for sound waves	$f_o = \dfrac{f_s v}{v \pm v_s}$
electric current	$I = Anvq$
resistors in series	$R = R_1 + R_2 + \ldots$
resistors in parallel	$\dfrac{1}{R} = \dfrac{1}{R_1} + \dfrac{1}{R_2} + \ldots$

© UCLES 2023

gravitational potential	$\phi = -\frac{GM}{r}$
gravitational potential energy	$E_P = -\frac{GMm}{r}$
pressure of an ideal gas	$p = \frac{1}{3}\frac{Nm}{V}\langle c^2\rangle$
simple harmonic motion	$a = -\omega^2 x$
velocity of particle in s.h.m.	$v = v_0 \cos \omega t$ $v = \pm \omega \sqrt{(x_0^2 - x^2)}$
electric potential	$V = \frac{Q}{4\pi\varepsilon_0 r}$
electrical potential energy	$E_P = \frac{Qq}{4\pi\varepsilon_0 r}$
capacitors in series	$\frac{1}{C} = \frac{1}{C_1} + \frac{1}{C_2} + ...$
capacitors in parallel	$C = C_1 + C_2 + ...$
discharge of a capacitor	$x = x_0 e^{-\frac{t}{RC}}$
Hall voltage	$V_H = \frac{BI}{ntq}$
alternating current/voltage	$x = x_0 \sin \omega t$
radioactive decay	$x = x_0 e^{-\lambda t}$
decay constant	$\lambda = \frac{0.693}{t_{\frac{1}{2}}}$
intensity reflection coefficient	$\frac{I_R}{I_0} = \frac{(Z_1 - Z_2)^2}{(Z_1 + Z_2)^2}$
Stefan–Boltzmann law	$L = 4\pi\sigma r^2 T^4$
Doppler redshift	$\frac{\Delta\lambda}{\lambda} \approx \frac{\Delta f}{f} \approx \frac{v}{c}$

1 **(a)** State Newton's law of gravitation.

.....

.....

..... [2]

(b) A satellite is in a circular orbit around a planet. The radius of the orbit is R and the period of the orbit is T. The planet is a uniform sphere.

Use Newton's law of gravitation to show that R and T are related by

$$4\pi^2 R^3 = GMT^2$$

where M is the mass of the planet and G is the gravitational constant.

[2]

(c) The Earth may be considered to be a uniform sphere of mass 5.98×10^{24} kg and radius 6.37×10^6 m.

A geostationary satellite is in orbit around the Earth.

Use the expression in **(b)** to determine the height of the satellite above the Earth's surface.

height = ... m [3]

(d) Another satellite is in a circular orbit around the Earth with the same orbital radius and period as the satellite in **(c)**.

(i) Calculate the angular speed of the satellite in this orbit. Give a unit with your answer.

angular speed = ... unit ..... [2]

(ii) Despite having the same orbital period, the orbit of this satellite is not geostationary.

Suggest **two** ways in which the orbit of this satellite could be different from the orbit of the satellite in **(c)**.

1 .....

.....

2 .....

.....
[2]

[Total: 11]

2 **(a)** **(i)** State what is meant by an ideal gas.

.....

.....

..... [2]

(ii) State the temperature, in degrees Celsius, of absolute zero.

temperature = ... °C [1]

(b) A sealed vessel contains a mass of 0.0424 kg of an ideal gas at 227 °C.
The pressure of the gas is 1.37×10^5 Pa and the volume of the gas is 0.640 m^3.

Calculate:

(i) the number of molecules of the gas in the vessel

number of molecules = ... [3]

(ii) the mass of one molecule of the gas

mass = ... kg [1]

(iii) the root-mean-square (r.m.s.) speed v of the molecules of the gas.

v = ... $m\,s^{-1}$ [3]

(c) The gas in **(b)** is now cooled gradually to absolute zero.

On Fig. 2.1, sketch the variation with thermodynamic temperature *T* of the r.m.s. speed of the molecules of the gas.

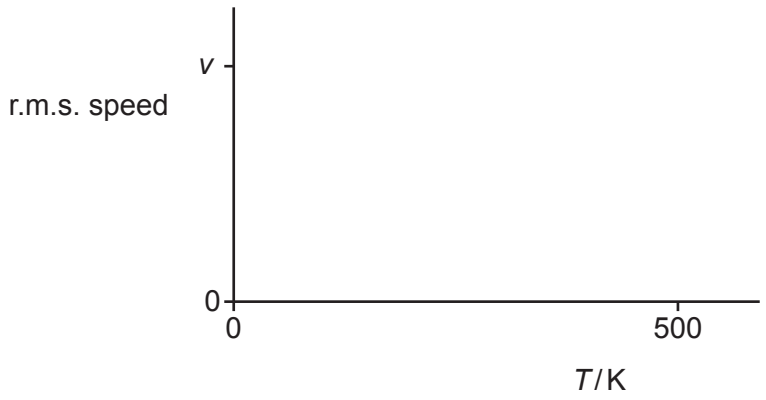

Fig. 2.1

[2]

[Total: 12]

3 **(a)** State the first law of thermodynamics. Identify the meaning of any symbols that you use.

.....

.....

..... [2]

(b) The state of an ideal gas is continuously changed according to the cycle ABCDA shown in Fig. 3.1.

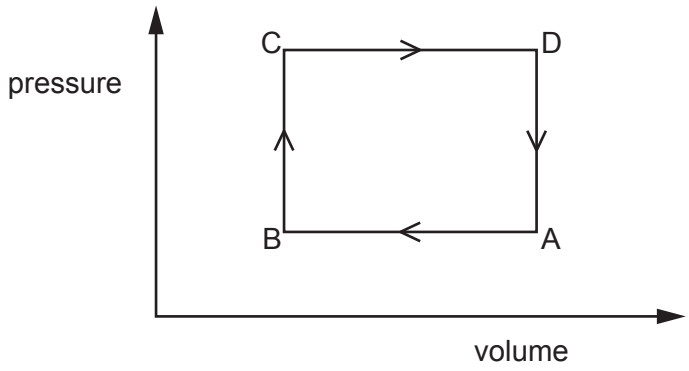

Fig. 3.1

(i) Complete Table 3.1 for the changes A to B and B to C by placing two ticks (✓) in each row.

Table 3.1

change	change in internal energy			work done on gas		
	decrease	no change	increase	negative	zero	positive
A to B						
B to C						

[4]

(ii) Use the first law of thermodynamics to describe and explain the energy transfers associated with one complete cycle ABCDA.

.....

.....

.....

.....

..... [3]

[Total: 9]

4 A small steel sphere is oscillating vertically on the end of a spring, as shown in Fig. 4.1.

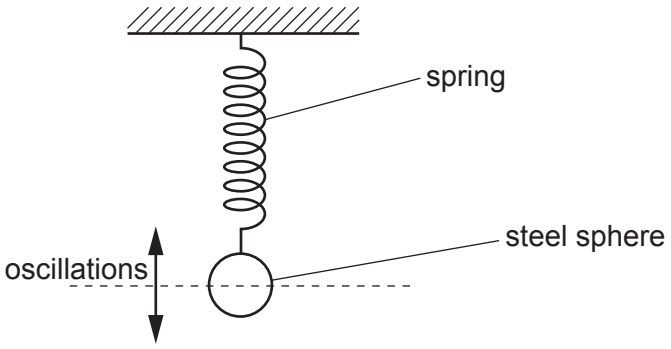

Fig. 4.1

The velocity v of the sphere varies with displacement x from its equilibrium position according to

$$v = \pm\, 9.7\sqrt{(11.6 - x^2)}$$

where v is in $\mathrm{cm\,s^{-1}}$ and x is in cm.

(a) **(i)** Calculate the frequency of the oscillations.

frequency = ... Hz [2]

(ii) Show that the amplitude of the oscillations is 3.4 cm.

[1]

(iii) Calculate the maximum acceleration a_0 of the sphere.

a_0 = ... $\mathrm{m\,s^{-2}}$ [2]

(b) On Fig. 4.2, sketch the variation with x of the acceleration a of the sphere.

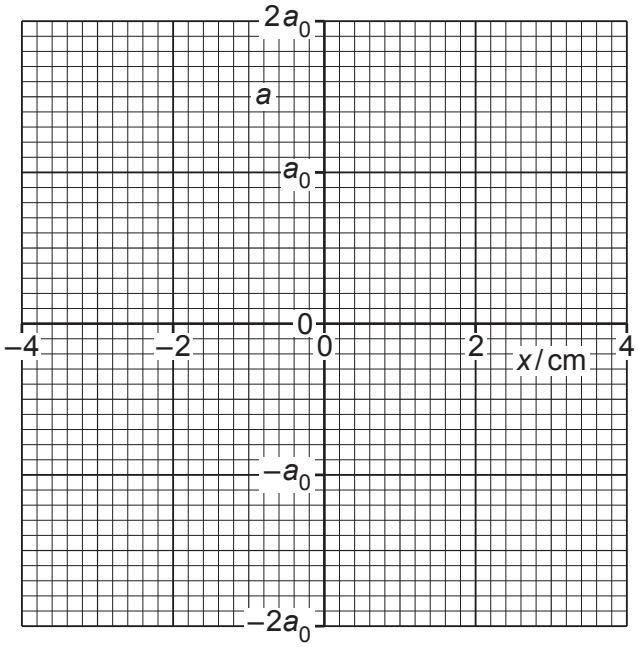

Fig. 4.2

[3]

(c) Describe, without calculation, the interchange between the potential energy and the kinetic energy of the oscillations.

.....

.....

.....

.....

..... [3]

[Total: 11]

5 Two capacitors A and B are connected into the circuit shown in Fig. 5.1.

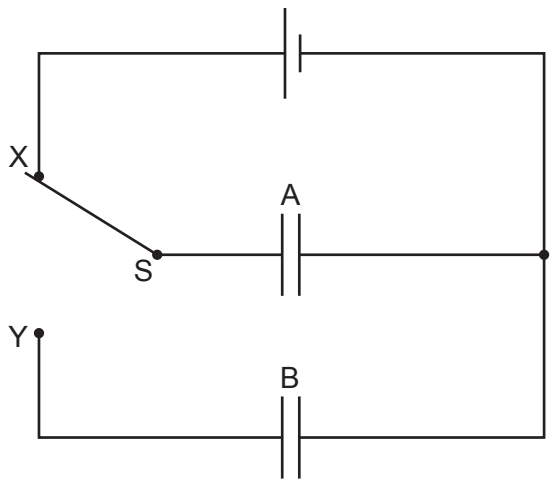

Fig. 5.1

Capacitor A has capacitance C and capacitor B has capacitance $3C$.
The electromotive force (e.m.f.) of the cell is V.
The two-way switch S is initially at position X, and capacitor B is initially uncharged.

(a) State, in terms of V and C, expressions for:

(i) the initial charge Q_A on the plates of capacitor A

Q_A = ... [1]

(ii) the initial energy E_A stored in capacitor A.

E_A = ... [1]

(b) The two-way switch S is now moved to position Y.

(i) State and explain what happens to the charge that was initially on the plates of capacitor A.

.....

.....

..... [2]

(ii) Show that the final potential difference (p.d.) V_B across capacitor B is given by

$$V_B = \frac{V}{4}.$$

Explain your reasoning.

[3]

(iii) Determine an expression, in terms of V and C, for the decrease ΔE in the total energy that is stored in the capacitors as a result of the change of the position of the switch.

ΔE = ... [2]

[Total: 9]

6 A heavy aluminium disc has a radius of 0.36 m. The disc rotates with the wheels of a vehicle and forms part of an electromagnetic braking system on the vehicle.

In order to activate the braking system, a uniform magnetic field of flux density 0.17 T is switched on. This magnetic field is perpendicular to the plane of rotation of the disc, as shown in Fig. 6.1.

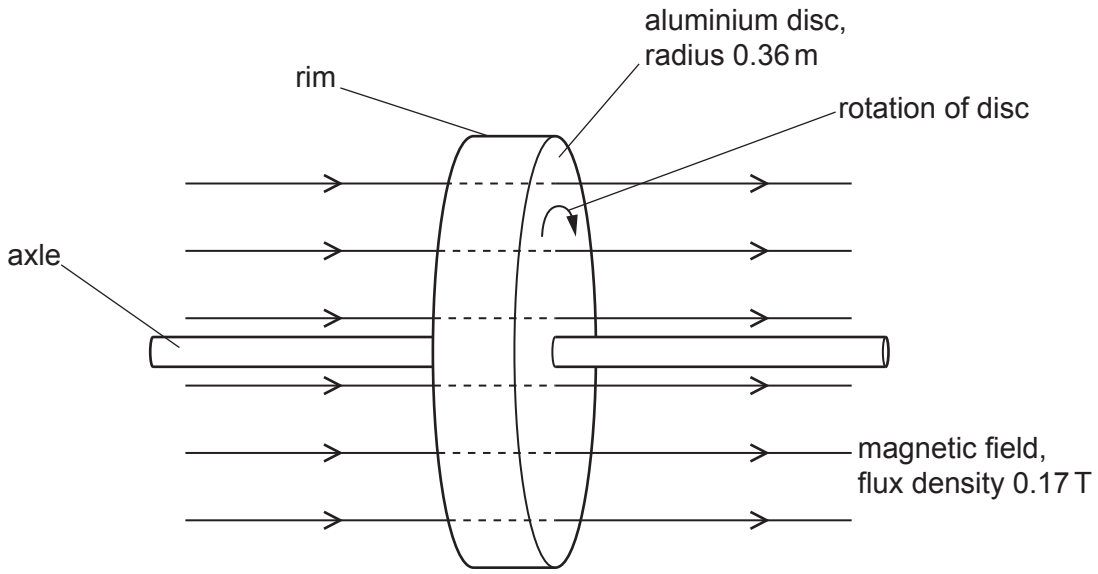

Fig. 6.1

(a) **(i)** Define magnetic flux.

.....

.....

..... [2]

(ii) Calculate the magnetic flux through the disc. Give a unit with your answer.

magnetic flux = ... unit ..... [2]

(b) The disc is rotating at a rate of 25 revolutions per second.

Calculate the magnitude of the electromotive force (e.m.f.) induced between the axle and the rim of the disc.

e.m.f. = ... V [3]

(c) The axle and the rim are connected into an external circuit that enables the energy of the rotation of the disc to be stored for future use. The direction of rotation is shown in Fig. 6.1.

Use Lenz's law of electromagnetic induction to determine whether the current in the disc is from the rim to the axle or from the axle to the rim. Explain your reasoning.

.....

.....

.....

.....

..... [3]

[Total: 10]

7 Four diodes are used in a bridge rectifier circuit to produce rectification of a sinusoidal a.c. input voltage V_{IN}.
Fig. 7.1 shows part of the circuit, but three of the diodes are missing.

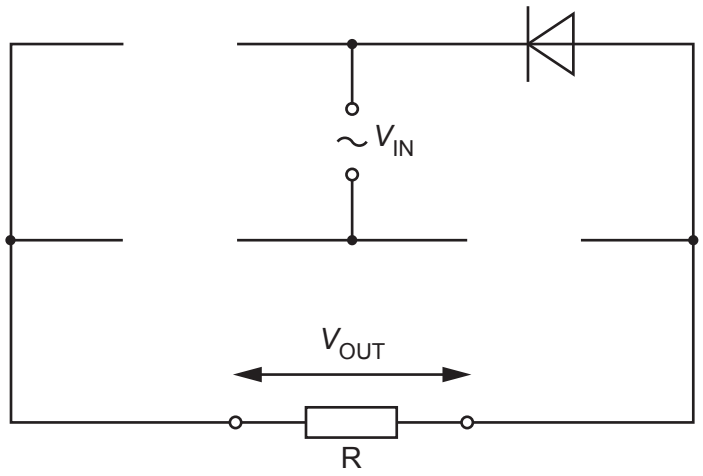

Fig. 7.1

The p.d. across the load resistor R is the output p.d. V_{OUT} of the bridge rectifier.

(a) **(i)** State the name of the type of rectification produced by a bridge rectifier.

..... [1]

(ii) Complete Fig. 7.1 by drawing the three missing diodes, correctly connected. [2]

(iii) On Fig. 7.1, draw an arrow to indicate the direction of the current in resistor R. [1]

(b) V_{IN} has amplitude V_0 and period T. Fig. 7.2 shows the variation with time t of V_{IN}.

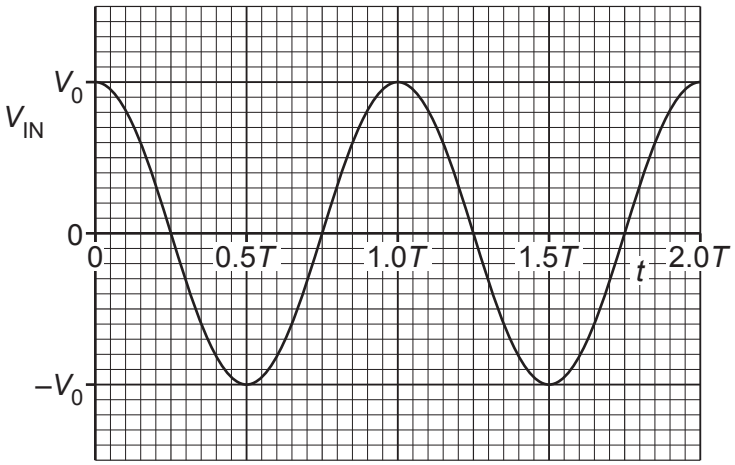

Fig. 7.2

(i) On Fig. 7.3, sketch the variation of V_{OUT} with t between $t = 0$ and $t = 2.0T$.

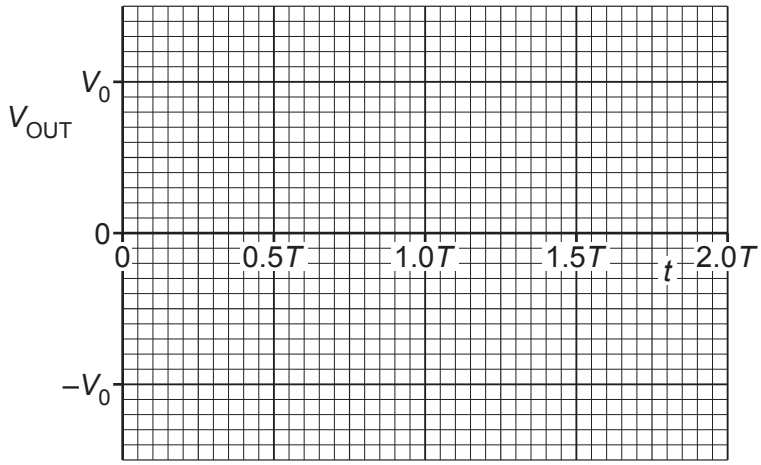

Fig. 7.3

[3]

(ii) The power dissipated in the resistor is P.

On Fig. 7.4, sketch the variation of P with t between $t = 0$ and $t = 2.0T$.

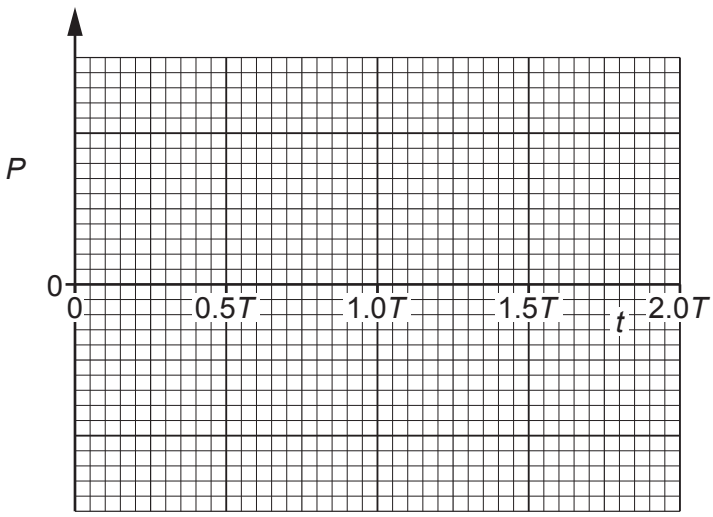

Fig. 7.4

[2]

(iii) Suggest, with a reason, how the root-mean-square (r.m.s.) value of V_{OUT} compares with the r.m.s. value of V_{IN}.

.....

..... [1]

[Total: 10]

8 Fig. 8.1 shows the lowest four energy levels of an electron in an isolated atom.

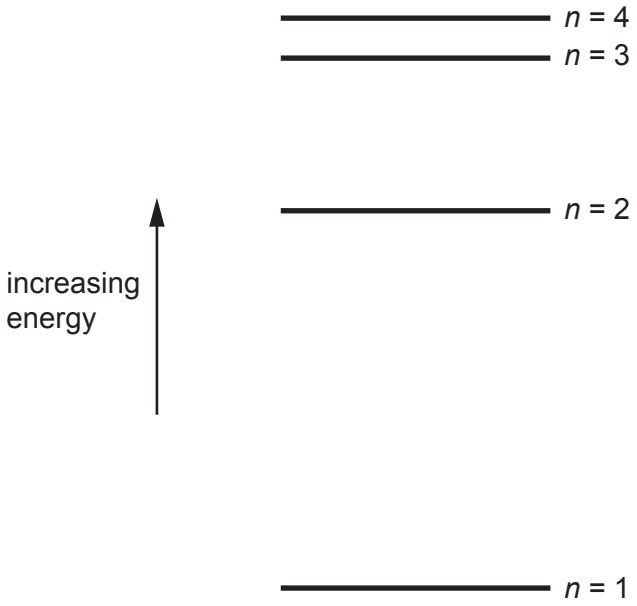

Fig. 8.1

Fig. 8.2 shows the lines in the emission spectrum of the atom that correspond to the transitions of the electron from $n = 3$ to $n = 1$ and from $n = 4$ to $n = 1$.

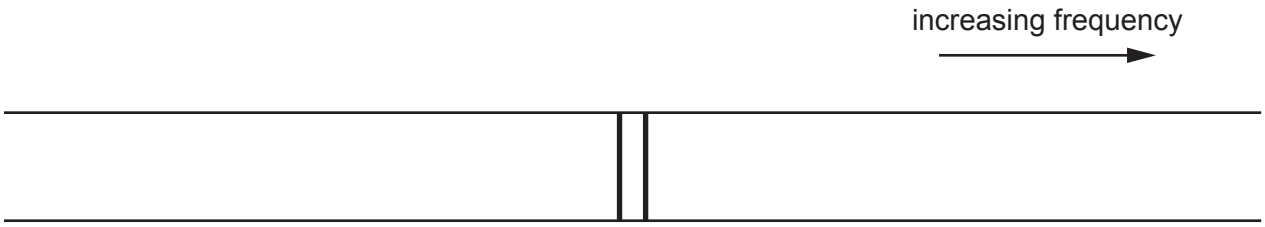

Fig. 8.2

(a) Explain, with reference to photons, why there is a single frequency of electromagnetic radiation that corresponds to each of these transitions.

.....

.....

..... [2]

(b) **(i)** On Fig. 8.2, draw a line that corresponds to the transition of the electron from $n = 2$ to $n = 1$. Label this line A. [2]

(ii) On Fig. 8.2, draw a line that corresponds to the transition of the electron from $n = 3$ to $n = 2$. Label this line B. [2]

(c) The frequency of radiation represented by line A is f_A.
The frequency of radiation represented by line B is f_B.
The energy of the ground state (n = 1) is E_1.

Determine an expression, in terms of f_A, f_B, E_1 and the Planck constant h, for the energy E_3 of the energy level n = 3.

E_3 = ... [2]

[Total: 8]

9 **(a)** Define mass defect.

.....

.....

..... [2]

(b) Table 9.1 shows the mass defects of three nuclei.

Table 9.1

nucleus	mass defect / u
$^{2}_{1}H$	0.002 388
$^{3}_{1}H$	0.009 105
$^{4}_{2}He$	0.030 377

The nuclear fusion process in a particular star is described by

$$^{2}_{1}H + ^{3}_{1}H \rightarrow ^{4}_{2}He + X$$

where X is a particle that has no mass defect.

(i) State the name of particle X.

..... [1]

(ii) Show that the energy released when one nucleus of $^{4}_{2}He$ is formed in this fusion reaction is 2.8×10^{-12} J.

[3]

(c) The star in **(b)** has a radius of 2.3×10^9 m and a luminosity of 1.4×10^{28} W.
All the energy released from the formation of ^4_2He is radiated away from the star.
All the energy that is radiated from the star has been released in the formation of ^4_2He.

Determine:

(i) the mass of ^4_2He produced per unit time by the fusion process

mass per unit time = ... $kg\,s^{-1}$ [3]

(ii) the surface temperature of the star.

temperature = ... K [2]

[Total: 11]

BLANK PAGE

10 **(a)** X-rays for use in medical diagnosis are produced in an X-ray tube. In the X-ray tube, charged particles are accelerated towards a metal target by an applied potential difference (p.d.).

(i) State the name of the charged particles that are accelerated by the applied p.d.

..... [1]

(ii) Explain how X-rays are produced at the metal target.

.....

.....

.....

..... [2]

(iii) Calculate the minimum wavelength of X-rays produced when the applied p.d. is 5.80 kV.

wavelength = ... m [3]

(b) X-rays pass through a medium that has an attenuation coefficient of $1.4\,cm^{-1}$.

Calculate the percentage of the X-ray energy that is **absorbed** by a 2.8 cm thickness of this medium.

percentage absorbed = ... % [3]

[Total: 9]

© UCLES 2023

BLANK PAGE

Permission to reproduce items where third-party owned material protected by copyright is included has been sought and cleared where possible. Every reasonable effort has been made by the publisher (UCLES) to trace copyright holders, but if any items requiring clearance have unwittingly been included, the publisher will be pleased to make amends at the earliest possible opportunity.

To avoid the issue of disclosure of answer-related information to candidates, all copyright acknowledgements are reproduced online in the Cambridge Assessment International Education Copyright Acknowledgements Booklet. This is produced for each series of examinations and is freely available to download at www.cambridgeinternational.org after the live examination series.

Cambridge Assessment International Education is part of Cambridge Assessment. Cambridge Assessment is the brand name of the University of Cambridge Local Examinations Syndicate (UCLES), which is a department of the University of Cambridge.

© UCLES 2023