Cambridge Assessment International Education

Cambridge International AS & A Level

CANDIDATE NAME	

CENTRE NUMBER						CANDIDATE NUMBER				

1568430 21

PHYSICS **9702/33**

Paper 3 Advanced Practical Skills 1 **October/November 2023**

2 hours

You must answer on the question paper.

You will need: The materials and apparatus listed in the confidential instructions

INSTRUCTIONS

- Answer **all** questions.
- Use a black or dark blue pen. You may use an HB pencil for any diagrams or graphs.
- Write your name, centre number and candidate number in the boxes at the top of the page.
- Write your answer to each question in the space provided.
- Do **not** use an erasable pen or correction fluid.
- Do **not** write on any bar codes.
- You will be allowed to work with the apparatus for a maximum of 1 hour for each question.
- You should record all your observations in the spaces provided in the question paper as soon as these observations are made.
- You may use a calculator.
- You should show all your working and use appropriate units.

INFORMATION

- The total mark for this paper is 40.
- The number of marks for each question or part question is shown in brackets [ ].

For Examiner's Use	
1	
2	
Total	

This document has **12** pages.

DC (KN/FC) 318722/2
© UCLES 2023

You may not need to use all of the materials provided.

1 In this experiment, you will investigate the oscillations of a pendulum.

(a) ● Set up the apparatus as shown in Fig. 1.1.

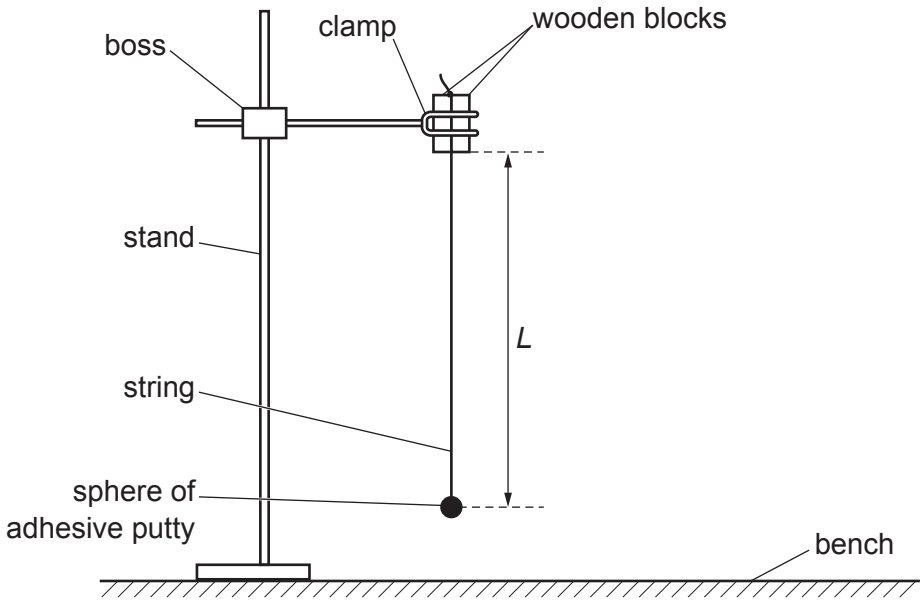

Fig. 1.1

● The length *L* of the pendulum is the distance between the bottom of the wooden blocks and the centre of the adhesive putty.

Adjust the length of the string so that *L* is approximately 53 cm.

● Measure and record *L*.

L = ... cm [1]

(b) ● Use the second boss to attach the wooden rod to the stand. Adjust the apparatus until the vertical string of the pendulum just touches against the wooden rod, as shown in Fig. 1.2.

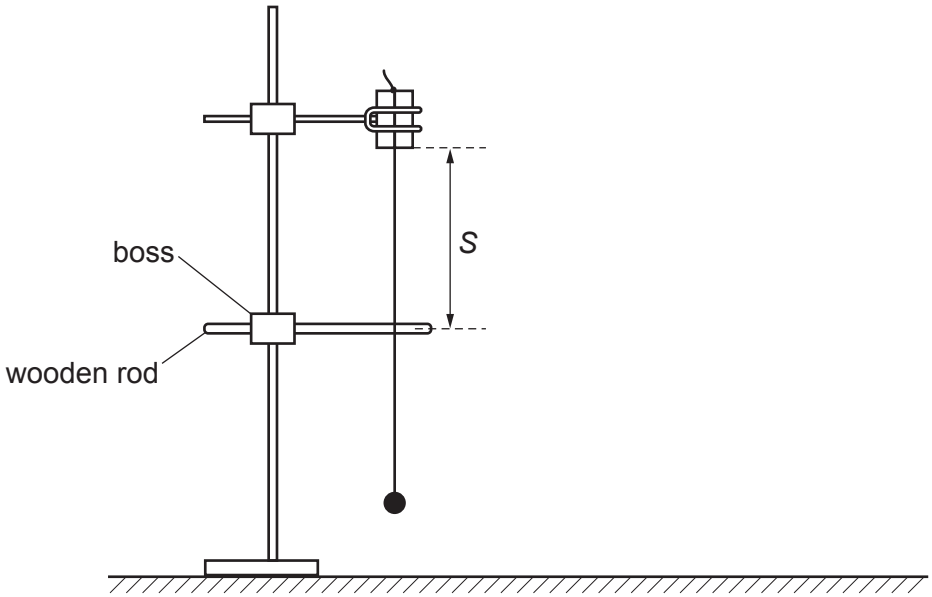

Fig. 1.2

● The distance between the bottom of the wooden blocks and the centre of the wooden rod is *S*.

Adjust the position of the wooden rod so that *S* is approximately 36 cm.

● Measure and record *S*.

S = ... cm

● Calculate (*L* – *S*).

(*L* – *S*) = ... cm

● Move the adhesive putty a small distance so that the string moves away from the wooden rod. Release the adhesive putty. The string hits the rod as the pendulum oscillates.

● Take measurements to determine the period *T* of the oscillations.

T = ... s
[2]

(c) Change S in the range $5.0\,\text{cm} \leqslant S \leqslant 45.0\,\text{cm}$ by adjusting the position of the wooden rod. Determine T. Repeat until you have six sets of values of S and T.

Record your results in a table. Include values of $\sqrt{(L - S)}$ in your table.

[8]

(d) **(i)** Plot a graph of T on the y-axis against $\sqrt{(L - S)}$ on the x-axis. [3]

(ii) Draw the straight line of best fit. [1]

(iii) Determine the gradient and y-intercept of this line.

gradient = ...

y-intercept = ...

[2]

(e) **(i)** It is suggested that the quantities T, L and S are related by the equation

$$T = A\sqrt{(L - S)} + B$$

where A and B are constants.

Using your answers in **(d)(iii)**, determine the values of A and B.
Give appropriate units.

A = ...

B = ...
[2]

(ii) Theory suggests that

$$A = \frac{\pi}{\sqrt{g}}$$

where g is the acceleration of free fall.

Use your answer in **(e)(i)** to determine a value for g.
Give an appropriate unit.

g = ... [1]

[Total: 20]

You may not need to use all of the materials provided.

2 In this experiment, you will investigate a wooden strip resting at an angle.

(a) (i) ● You are provided with a wooden strip, as shown in Fig. 2.1.

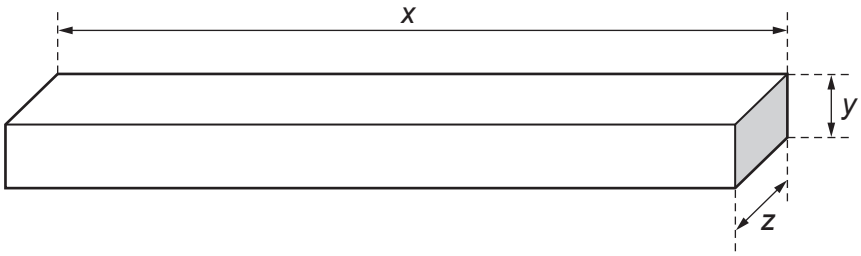

Fig. 2.1 (not to scale)

The dimensions of the strip are *x*, *y* and *z*.

Measure and record *x*, *y* and *z*.

x = ... m

y = ... m

z = ... m

● The volume *V* of the strip is given by the equation

$$V = xyz.$$

Calculate *V*.

V = ... m^3
[2]

(ii) Justify the number of significant figures that you have given for your value of *V*.

.....

.....

..... [1]

(b) (i) ● Set up the apparatus as shown in Fig. 2.2.

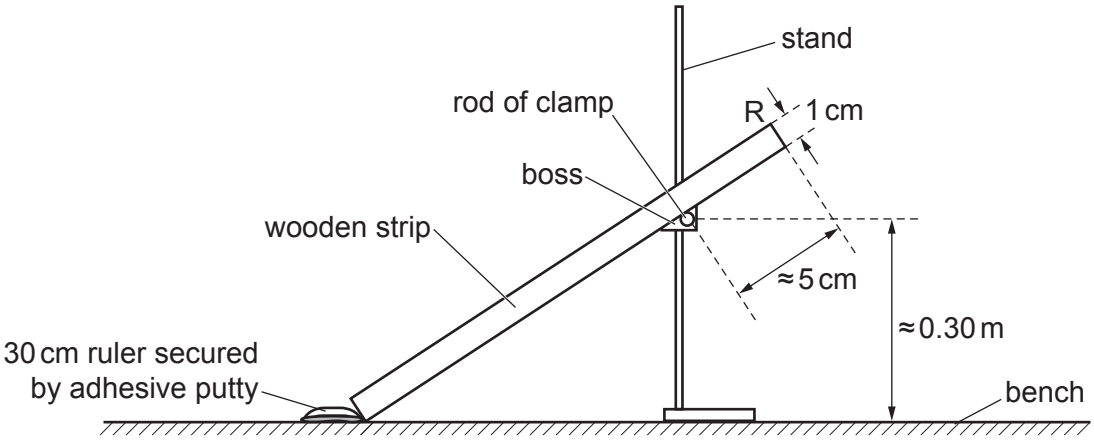

Fig. 2.2 (not to scale)

- Adjust the position of the boss so that the rod of the clamp is approximately 0.30 m above the bench.
- Use some of the adhesive putty to secure the 30 cm ruler to the bench, as shown in Fig. 2.2.
- The raised end of the wooden strip is R, as shown in Fig. 2.2. Place the wooden strip on the rod and adjust the position of the stand so that the distance between the rod and R is approximately 5 cm.
- Use adhesive putty to attach the mass to the wooden strip so that the distance *d* between the lower end of the wooden strip and the centre of the mass is approximately 0.15 m, as shown in Fig. 2.3.

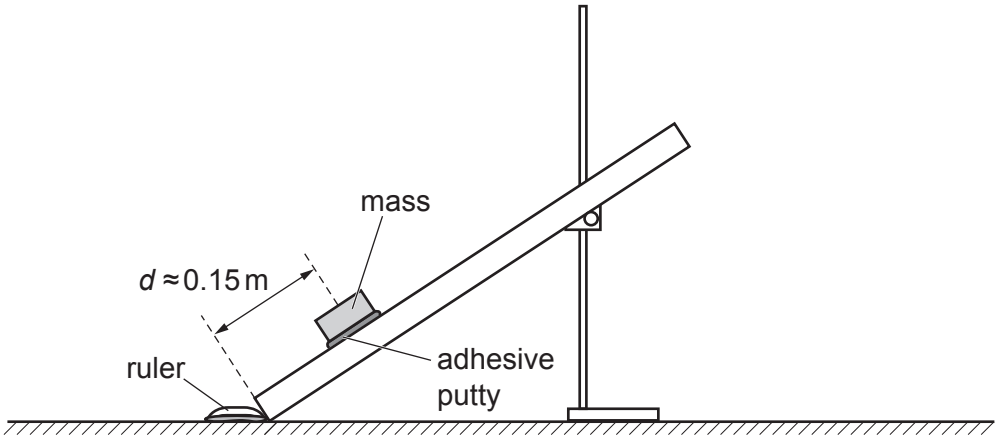

Fig. 2.3

- Measure and record *d*.

d = ... m [1]

(ii) ● Use adhesive putty to attach the loop of string at the raised end R of the wooden strip, as shown in Fig. 2.4.

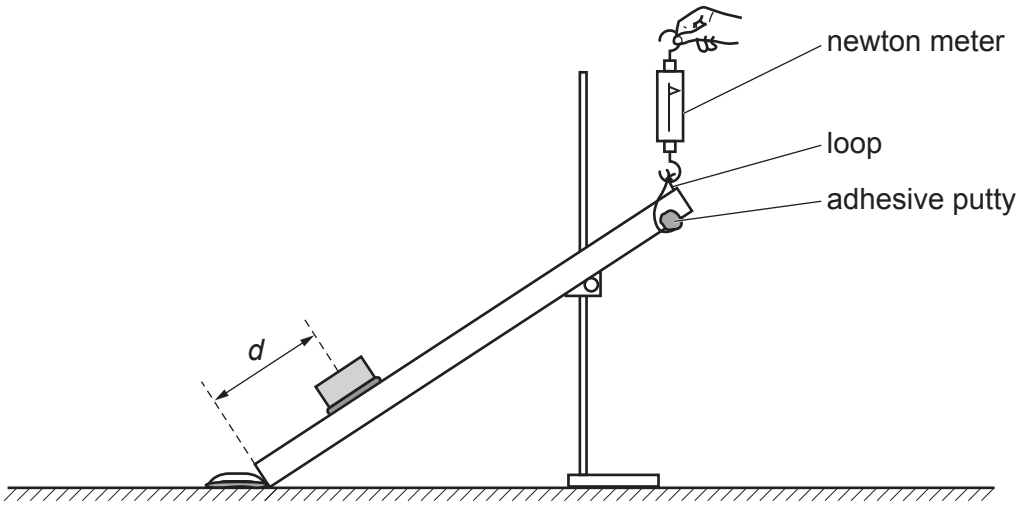

Fig. 2.4

● Use the newton meter to determine the vertical force *F* needed to just lift the wooden strip from the rod.

F = ... N [2]

(iii) Estimate the percentage uncertainty in your value of *F*. Show your working.

percentage uncertainty = ... % [1]

(iv) ● Adjust the position of the mass so that d is approximately 0.30 m.

● Measure and record d and F.

d = ... m

F = ... N
[2]

(c) It is suggested that the relationship between F, x and d is

$$Fx = Wd + k$$

where W is the weight of the mass and has the value 0.49 N, and k is a constant.

Using your data, calculate two values of k.

first value of k = ...

second value of k = ...
[1]

(d) It is suggested that the percentage uncertainty in the values of k is 15%.

Using this uncertainty, explain whether your results support the relationship in **(c)**.

.....

.....

.....

..... [1]

(e) Theory suggests that

$$k = \frac{\rho g V x}{2}$$

where g is $9.8\,\mathrm{N\,kg^{-1}}$ and ρ is the density of the wood.

Use your second value of k and values from **(a)(i)** to determine ρ.
Give an appropriate unit.

ρ = ... [1]

(f) **(i)** Describe **four** sources of uncertainty or limitations of the procedure for this experiment.

For any uncertainties in measurement that you describe, you should state the quantity being measured and a reason for the uncertainty.

1 .....

.....

2 .....

.....

3 .....

.....

4 .....

.....

[4]

(ii) Describe **four** improvements that could be made to this experiment. You may suggest the use of other apparatus or different procedures.

1 .....

.....

2 .....

.....

3 .....

.....

4 .....

.....

[4]

[Total: 20]

Permission to reproduce items where third-party owned material protected by copyright is included has been sought and cleared where possible. Every reasonable effort has been made by the publisher (UCLES) to trace copyright holders, but if any items requiring clearance have unwittingly been included, the publisher will be pleased to make amends at the earliest possible opportunity.

To avoid the issue of disclosure of answer-related information to candidates, all copyright acknowledgements are reproduced online in the Cambridge Assessment International Education Copyright Acknowledgements Booklet. This is produced for each series of examinations and is freely available to download at www.cambridgeinternational.org after the live examination series.

Cambridge Assessment International Education is part of Cambridge Assessment. Cambridge Assessment is the brand name of the University of Cambridge Local Examinations Syndicate (UCLES), which is a department of the University of Cambridge.

© UCLES 2023