Cambridge Assessment International Education

Cambridge International AS & A Level

CANDIDATE NAME	

CENTRE NUMBER						CANDIDATE NUMBER				

BIOLOGY **9700/42**

Paper 4 A Level Structured Questions **October/November 2023**

2 hours

You must answer on the question paper.

No additional materials are needed.

INSTRUCTIONS

- Answer **all** questions.
- Use a black or dark blue pen. You may use an HB pencil for any diagrams or graphs.
- Write your name, centre number and candidate number in the boxes at the top of the page.
- Write your answer to each question in the space provided.
- Do **not** use an erasable pen or correction fluid.
- Do **not** write on any bar codes.
- You may use a calculator.
- You should show all your working and use appropriate units.

INFORMATION

- The total mark for this paper is 100.
- The number of marks for each question or part question is shown in brackets [ ].

This document has **24** pages. Any blank pages are indicated.

DC (ST/JG) 323130/3
© UCLES 2023

1 **(a)** Some organisms carry out respiration in anaerobic conditions when oxygen is not available or when there is a low concentration of oxygen. In yeast and some plants, this is called ethanol fermentation. In mammals, it is called lactate fermentation.

Fig. 1.1 outlines ethanol fermentation and lactate fermentation.

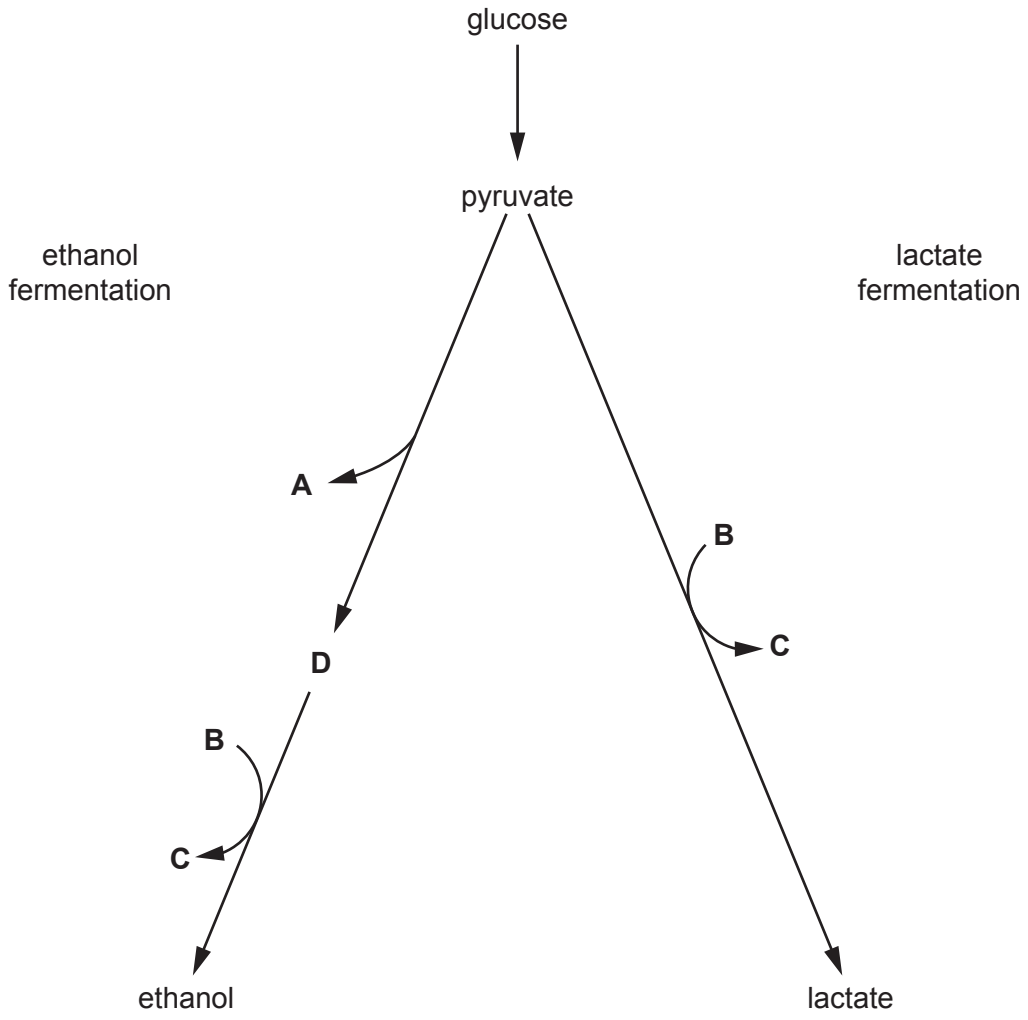

Fig. 1.1

Identify substances **A**–**D**.

A .....

B .....

C .....

D .....

[3]

(b) Explain how processes such as ethanol fermentation and lactate fermentation allow cells to continue to function in the absence of oxygen.

.....

.....

.....

.....

.....

.....

..... [3]

(c) The cereal crop rice, *Oryza sativa*, grows in fields that are flooded with water. The roots of the rice plants are submerged in water that contains very little oxygen.

Describe **and** explain how rice plants are adapted to grow in flooded fields.

.....

.....

.....

.....

.....

.....

.....

.....

..... [3]

[Total: 9]

2 Yeasts are unicellular organisms from the kingdom Fungi. *Saccharomyces cerevisiae* is one species of yeast that can carry out either asexual reproduction by mitosis or sexual reproduction by meiosis.

Budding in *S. cerevisiae* is a process where a small daughter cell forms as a bud on the parent cell. The bud contains a copy of the parent cell nucleus and it eventually separates from the parent cell to form a new cell.

S. cerevisiae can exist in two forms: haploid cells or diploid cells.
- Haploid cells can be one of two different mating types: **a** and α.
- Haploid cells can only mate with other haploid cells of the opposite mating type.

Fig. 2.1 shows the life cycle of *S. cerevisiae* with its asexual and sexual reproductive stages.

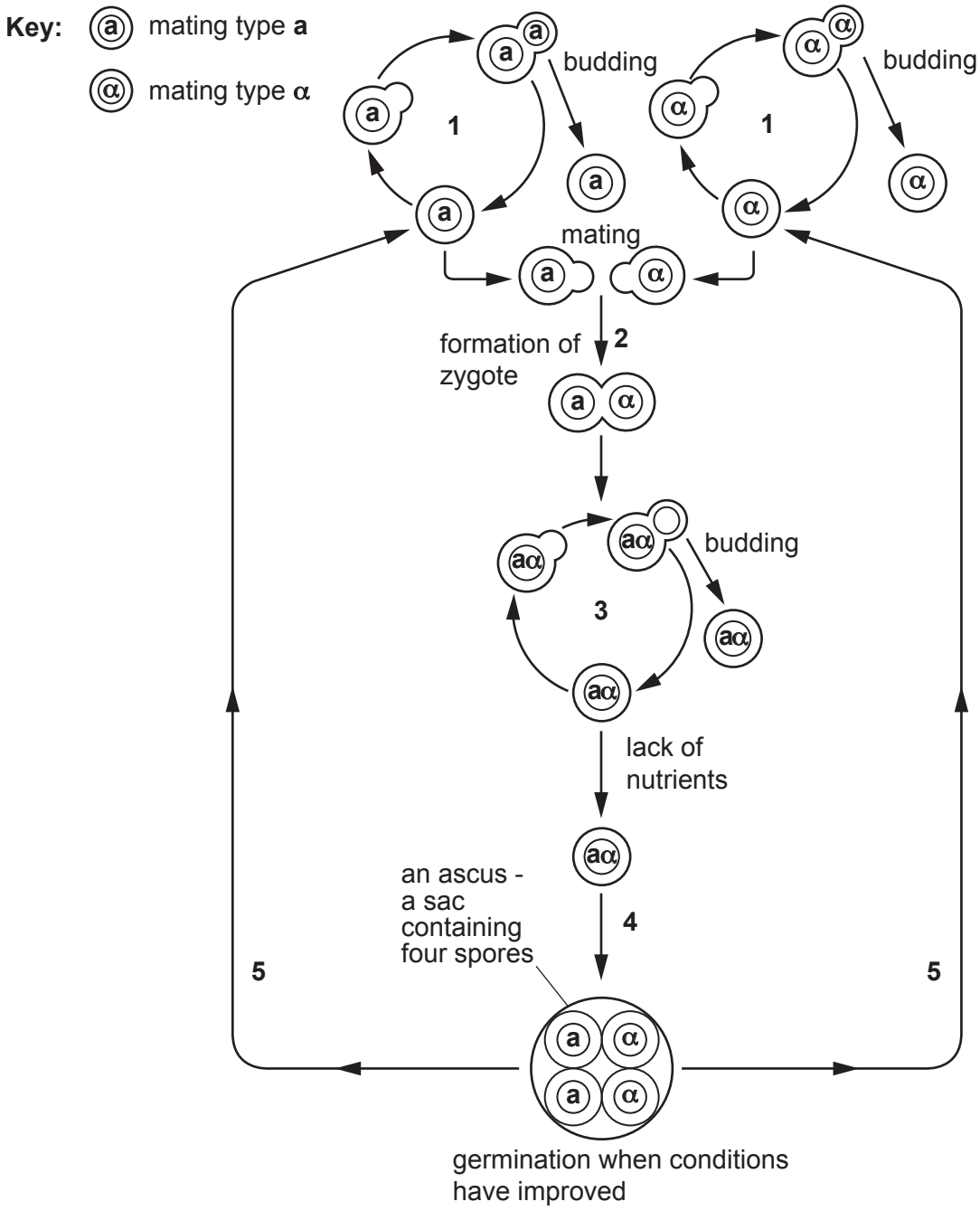

Fig. 2.1

(a) With reference to Fig. 2.1, state the numbers of the stages **1**–**5** that:

involve mitosis .....

involve meiosis .....

produces new genetic variation .....

shows only haploid cells .....

shows only diploid cells .....

[5]

(b) When there is a lack of nutrients, cells made in stage **3** will carry out stage **4** to make spores, which germinate only when conditions improve.

Suggest **and** explain how the type of reproduction that makes spores during stage **4** is advantageous for *S. cerevisiae* in a changing environment.

.....

.....

.....

.....

.....

.....

.....

..... [4]

(c) Haploid and diploid cells of *S. cerevisiae* can carry out **asexual** reproduction.

Suggest why a new harmful recessive mutation may **not** have a damaging effect on:
- an asexually reproducing population of haploid cells of *S. cerevisiae*
- an asexually reproducing population of diploid cells of *S. cerevisiae*.

.....

.....

.....

.....

.....

.....

..... [3]

(d) State **two** features, other than reproduction using spores, of the kingdom Fungi.

.....

.....

..... [2]

[Total: 14]

3 Research suggests that selective breeding began about 10 000 years ago. Selective breeding has been important in satisfying the global demand for food.

(a) The introduction of disease resistance to varieties of wheat is an example of selective breeding.

Outline the steps involved in the introduction of disease resistance to varieties of wheat.

.....

.....

.....

.....

.....

.....

.....

.....

.....

.....

.....

.....

.....

..... [5]

(b) Suggest **two** possible disadvantages of selective breeding.

.....

.....

.....

.....

..... [2]

[Total: 7]

4 **(a)** A marker gene can be used when a gene of interest is introduced into a plant by genetic engineering.

Describe **and** explain how the use of a marker gene coding for a fluorescent product can show that the introduced gene of interest is being expressed in plants.

.....

.....

.....

.....

.....

.....

.....

.....

.....

.....

.....

..... [4]

(b) Give **two** advantages of genetically engineering herbicide resistance in crop plants such as soybean.

.....

.....

.....

..... [2]

(c) DNA microarray analysis is a technique used in genetic technology that involves fluorescence. A DNA microarray has single-stranded probes attached to its surface. These probes hybridise to the fluorescently tagged single-stranded DNA that is added.

(i) Explain why DNA hybridisation occurs between the probe DNA and the added DNA.

.....

..... [1]

(ii) A DNA microarray analysis can be used to identify the level of expression of some genes.

Describe **and** explain how the level of expression of some genes can be identified using the DNA microarray analysis technique.

.....

.....

.....

.....

.....

.....

.....

..... [3]

[Total: 10]

5 The fruit fly, *Drosophila melanogaster*, has autosomal genes for body colour and wing shape.

Gene **B/b** is involved in the production of body colour:
- **B** = dominant allele for brown body colour
- **b** = recessive allele for black body colour.

Gene **D/d** is involved in wing shape:
- **D** = dominant allele for straight wing
- **d** = recessive allele for curved wing.

A dihybrid test cross was carried out between flies heterozygous for body colour and for wing shape and flies homozygous recessive for body colour and for wing shape.

(a) Table 5.1 shows the number of offspring of each phenotype obtained in the test cross.

Table 5.1

phenotype	observed number	expected number
brown body colour, straight wings	2843	
brown body colour, curved wings	855	
black body colour, straight wings	842	
black body colour, curved wings	2768	

Use Table 5.1 to calculate the expected number of each phenotype if the two genes are on **different** autosomes. Write your answers in the table. [1]

(b) A chi-squared (χ^2) test was carried out to compare the observed results with the results that would be expected from a dihybrid cross involving genes on different autosomes.

The value of χ^2 = 2097.836.

Table 5.2 shows the critical values for the χ^2 distribution.

Table 5.2

degrees of freedom	*p* value		
	0.05	**0.01**	**0.001**
1	3.841	6.635	10.828
2	5.991	9.210	13.816
3	7.815	11.345	16.266
4	9.488	13.277	18.467

© UCLES 2023

Explain how the value of χ^2 and Table 5.2 can be used to assess the significance of the difference between the observed results and the expected numbers in Table 5.1.

.....

.....

.....

.....

.....

.....

.....

.....

.....

..... [4]

(c) Suggest explanations for the **observed** results in Table 5.1.

.....

.....

.....

.....

.....

.....

.....

.....

.....

..... [4]

[Total: 9]

6 **(a)** **(i)** When blood glucose concentration decreases, glucagon is released by the pancreas into the blood and is transported to the cells.

Fig. 6.1 outlines the effect of glucagon on liver cells.

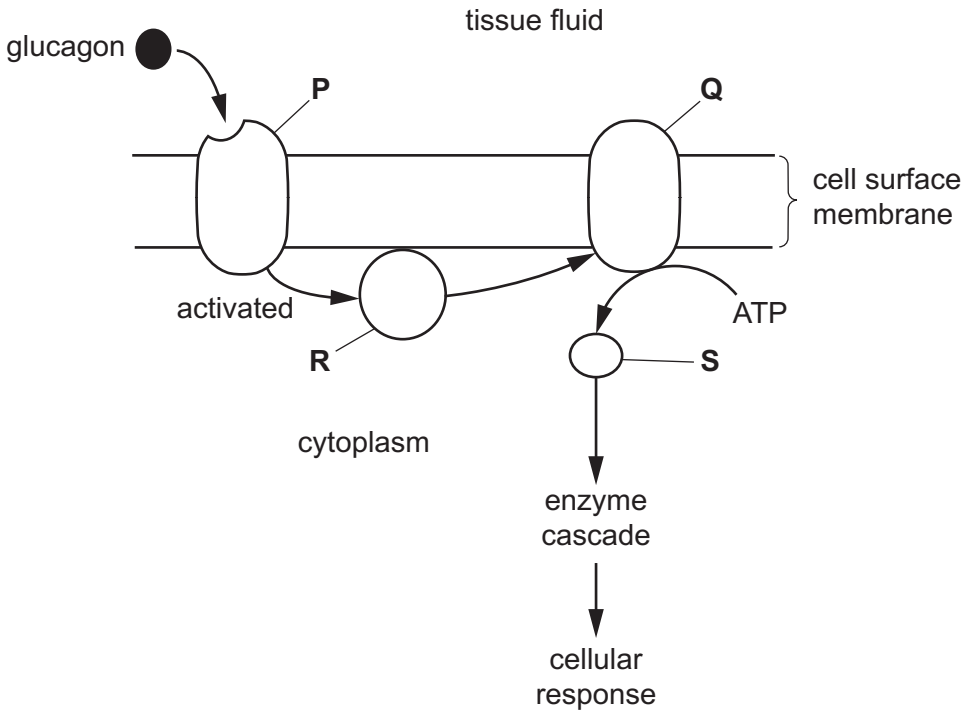

Fig. 6.1

Identify **P**, **Q**, **R** and **S** shown in Fig. 6.1.

P .....

Q .....

R .....

S .....

[4]

(ii) Table 6.1 shows four processes carried out by liver cells that are affected by a decrease in blood glucose concentration. Some of these are cellular responses from cell signalling by glucagon.

Complete Table 6.1 by stating whether the rate of each process **increases** or **decreases** when blood glucose concentration decreases.

Table 6.1

process	**effect on rate of process when blood glucose concentration decreases**
glycogenolysis (glycogen breakdown)	.....
glycogenesis (glycogen formation)	.....
glycolysis	.....
fatty acid synthesis	.....

[3]

(b) Type 2 diabetes is a condition affecting the homeostatic control of blood glucose concentration. In type 2 diabetes, target cells have a much lower response to insulin and some glucose is excreted in the urine.

Test strips can be used to measure the concentration of glucose in a sample of urine, but many people with type 2 diabetes measure blood glucose concentration using a biosensor.

Explain the principles of operation of a test strip for glucose **and** suggest advantages for a person with type 2 diabetes of using a biosensor instead of a test strip.

.....

.....

.....

.....

.....

.....

.....

.....

.....

.....

.....

.....

.....

..... [7]

[Total: 14]

7 **(a)** There are many mitochondria located in the presynaptic knobs of neuromuscular junctions and in the sarcomeres of muscle fibres of striated muscle.

Explain the need for many mitochondria in the presynaptic knobs and in the sarcomeres.

.....

.....

.....

.....

.....

.....

.....

.....

.....

..... [4]

(b) Fig. 7.1 is a diagram of synapses between a postsynaptic neurone and two presynaptic neurones, **X** and **Y**.

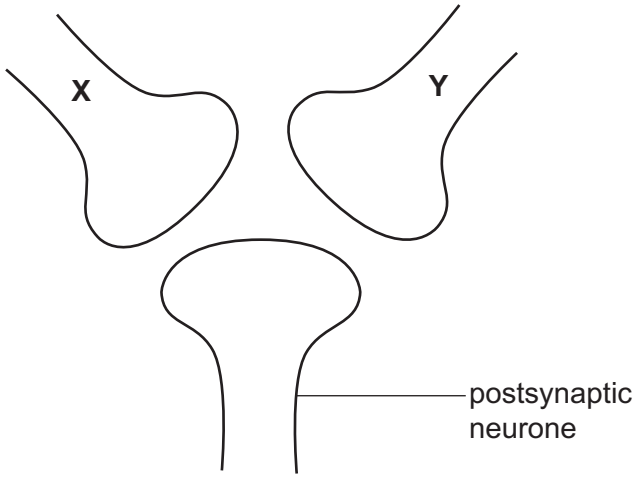

Fig. 7.1

- Neurone **X** releases the neurotransmitter acetylcholine.
- Neurone **Y** releases the neurotransmitter glutamate.
- Both neurotransmitters bind to channel proteins in the membrane of the postsynaptic neurone.
- Acetylcholine binding results in an influx (entry) of sodium ions.
- Glutamate binding results in an influx of chloride ions.

A student made three statements:

1. When only neurone **X** is stimulated, an action potential **will** occur in the postsynaptic neurone.
2. When only neurone **Y** is stimulated, an action potential **will** occur in the postsynaptic neurone.
3. When neurone **X** and neurone **Y** are stimulated at the same time, an action potential **will not** occur in the postsynaptic neurone.

Explain whether or not you agree with these statements.

.....

.....

.....

.....

.....

.....

.....

..... [3]

(c) Multiple sclerosis is a condition in which the myelin sheath breaks down in some neurones.

Suggest the effect of multiple sclerosis on the transmission of action potentials in the affected neurones.

.....

.....

.....

.....

..... [2]

[Total: 9]

8 **(a)** Non-cyclic photophosphorylation occurs in the light-dependent stage of photosynthesis.

Outline the main features of non-cyclic photophosphorylation.

.....

.....

.....

.....

.....

.....

.....

.....

.....

..... [4]

(b) Some Calvin cycle intermediates are used to produce other molecules that are **not** part of the Calvin cycle.

Name **two** of these intermediates.

For each intermediate, state **one** example of the type of molecule that is produced.

intermediate .....

molecule produced .....

intermediate .....

molecule produced .....

[2]

(c) Fig. 8.1 shows how the rate of uptake of carbon dioxide by a plant varies with temperature, at an optimum intensity of light on a clear day.

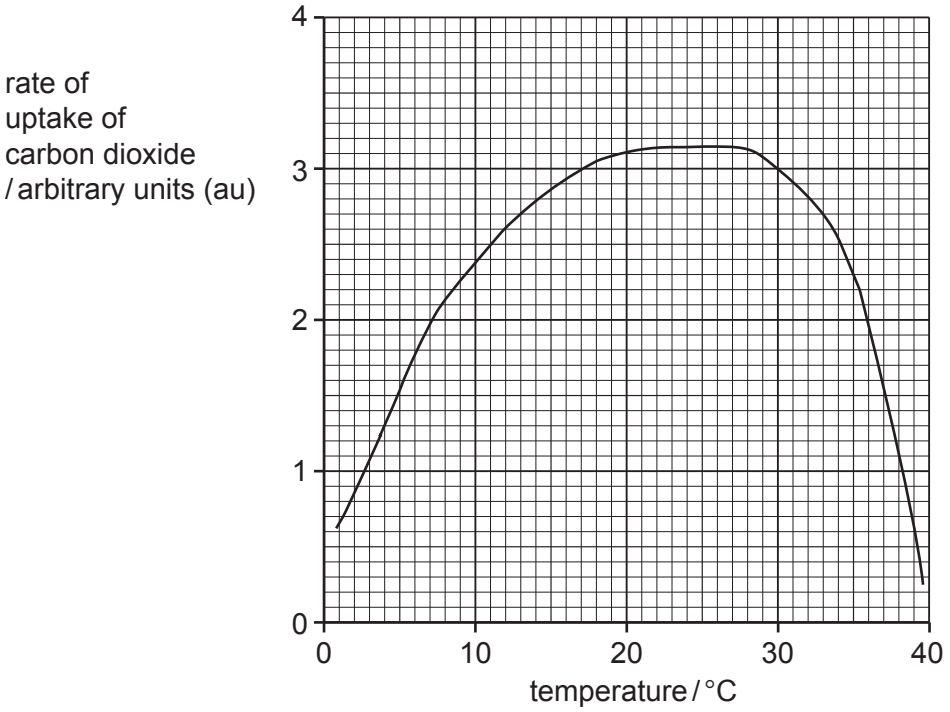

Fig. 8.1

(i) Calculate the mean increase in rate of uptake of carbon dioxide as the temperature increases from 5 °C to 20 °C.

Show your working.

Give your answer to **two** decimal places.

..... au °C^{-1} [2]

(ii) Suggest why the rate of carbon dioxide uptake levels off and then decreases after 20 °C.

.....

.....

.....

.....

.....

..... [3]

(iii) On Fig. 8.1, draw a curve to show the uptake of carbon dioxide on a cloudy day. [1]

[Total: 12]

9 **(a)** Antidiuretic hormone (ADH) is involved in the maintenance of a constant blood water potential.

A student drank 0.5 dm^3 of water and the concentration of ADH in their blood was measured every 30 minutes for 3 hours.

Fig. 9.1 shows the results of this investigation.

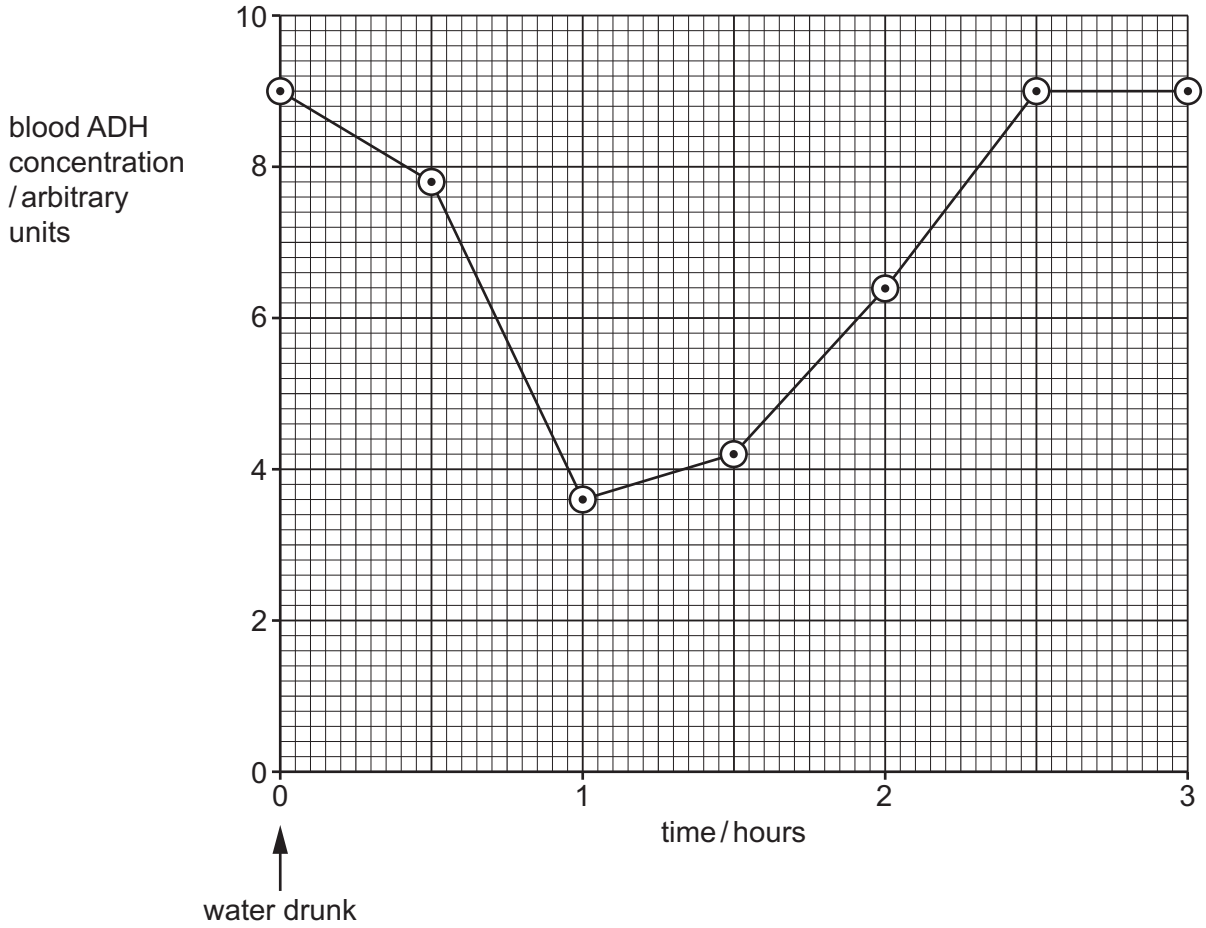

Fig. 9.1

Explain the results shown in Fig. 9.1.

.....

.....

.....

.....

.....

.....

.....

.....

..... [4]

(b) Outline the differences between the endocrine system and the nervous system.

.....

.....

.....

.....

.....

.....

.....

.....

..... [4]

[Total: 8]

10 (a) The passage outlines one method of estimating the size of an animal population.

Complete the passage by using the most appropriate scientific terms.

The size of a population of animals can be estimated using the mark-release-recapture method. A sample of animals is captured using a humane (harmless) trap and is counted. The animals are marked using a method that does not harm them. This can be done using a small tag or ..... . The marked animals are released into the area where they were captured. Time is allowed for the marked animals to mix into the population. This period of time must be short so that emigration, immigration, migration or ..... do not occur.

A second sample of animals is then captured and the number of marked and unmarked animals is counted. The population size can be estimated using the ..... Index. For reliability, the method should be ..... .

[4]

(b) Himalayan balsam, *Impatiens glandulifera*, is an annual plant native to Pakistan, India and Nepal. It was first introduced into the United Kingdom (UK) in 1839 because of its attractive flowers. Individual plants can produce thousands of mature seeds. These can be dispersed for long distances when the capsules that contain the seeds burst.

Fig. 10.1 shows Himalayan balsam growing in a woodland.

Fig. 10.1

Himalayan balsam has now become established in the UK. It is listed as an invasive alien species and attempts are being made to eradicate (remove) the plant.

Not all alien plant species are considered to be invasive.

Suggest why Himalayan balsam has been listed as an invasive alien species in the UK.

.....

.....

.....

.....

.....

.....

.....

.....

..... [4]

[Total: 8]

BLANK PAGE

The boundaries and names shown, the designations used and the presentation of material on any maps contained in this question paper/insert do not imply official endorsement or acceptance by Cambridge Assessment International Education concerning the legal status of any country, territory, or area or any of its authorities, or of the delimitation of its frontiers or boundaries.

Permission to reproduce items where third-party owned material protected by copyright is included has been sought and cleared where possible. Every reasonable effort has been made by the publisher (UCLES) to trace copyright holders, but if any items requiring clearance have unwittingly been included, the publisher will be pleased to make amends at the earliest possible opportunity.

To avoid the issue of disclosure of answer-related information to candidates, all copyright acknowledgements are reproduced online in the Cambridge Assessment International Education Copyright Acknowledgements Booklet. This is produced for each series of examinations and is freely available to download at www.cambridgeinternational.org after the live examination series.

Cambridge Assessment International Education is part of Cambridge Assessment. Cambridge Assessment is the brand name of the University of Cambridge Local Examinations Syndicate (UCLES), which is a department of the University of Cambridge.

© UCLES 2023